ALPI-00725

ALPINE
SERVICE MANUAL

FM/AM Compact Disc Receiver

COMPACT disc DIGITAL AUDIO

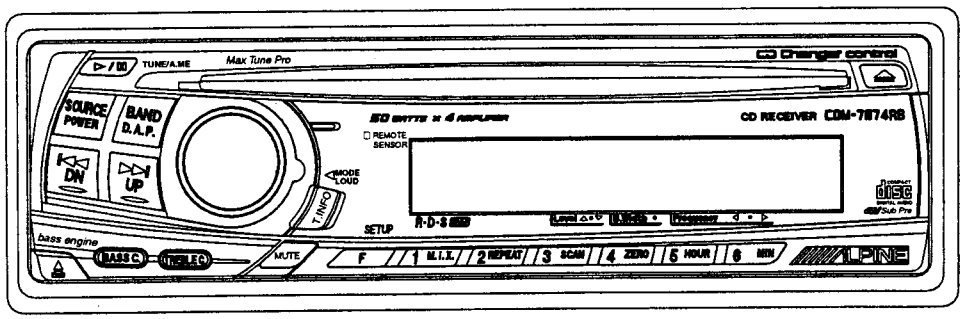

(CDM-7874RB)

CDM-7874RB/CDM-7872RB/ CDM-7871R/CDM-7871RM/ CDE-7860R

<Cautions for Safe Repair Work>

The following cautions will prevent accidents in the workplace and will ensure safe products.

●The symbols indicate caution is needed to prevent injuries and damage to property.

The symbols and their meanings follow.

⚠ **Warning**	If you ignore this symbol and handle the product incorrectly or unsafely, serious injury or death may result.
⚠ **Caution**	If you ignore this symbol and handle the product incorrectly or unsafely, injury or only material damage may result.

●The following symbols indicate two levels of cautions.

⚠	When you see this symbol, you have to be very careful.
❗	When you see this symbol, you have to follow the instructions there.

⚠ Warning

⚠ **Do not look squarely into the laser light coming from the pickup.** You may loose you sight.	❗ **Fuse Caution** Always use a designated fuse. Use of an incorrect fuse may result in a fire.

⚠ Caution

⚠ **Do not allow wiring to be caught in the screw/chassis.** If wiring is caught in the screw/chassis, it may cause a short circuit, resulting in a fire.	❗ **Battery Caution** Use the designated battery. Confirm the correct polarity and seat of the battery. An incorrect battery or an improperly connected or seated battery may result in a fire.
⚠ **High Temperature Caution** Touching the heat sink may cause severe burns.	❗ **Designated Parts Caution** Look up the part list and ensure that only designated parts are used to prevent problems or accidents.
⚠ **Reverse Power Supply Connections or Misconnections Caution** Reverse power supply connections or misconnections may cause ignition problems and smoke may result.	❗ **Wiring Caution** Ensure that the wiring is correct when rewiring to prevent problems with ignition/breakdown.
⚠ **Soldering Caution** Hot solder from solder splash may cause severe burns.	❗ **Wear Gloves** Wear gloves to prevent electrical shocks or injury from the end face of the metal.

Contents

Packing Assembly Parts List 4
Packing Method View 4
Specifications 5, 6
Adjustment Procedures 7, 8
Extension Cable 9
Block Diagram 10
Parts Layout on P.W.Boards and Wiring Diagram ..... 11~20
Schematic Diagram ..... 21~36
Terminal Voltage of IC/TR ..... 27~32
Description of IC Terminal ..... 33~35
Electrical Parts List ..... 36~43
Cabinet Assembly Parts List 44
Exploded View (Cabinet) 45, 46
Exploded View (CD Deck Mechanism) (DP23S2A0) 47, 48
CD Deck Mechanism Assembly Parts List 49

NOTE : Due to continuing product improvement, specifications and designs are subject to change without notice.

CDM-7874RB/CDM-7872RB/CDM-7871R
CDM-7871RM/CDE-7860R

Packing Assembly Parts List

Symbol No.	Part No.	Description
101-1	03S72235F13	SCR,MCH M5X8 FLAT
101-2	01T15394Y02	ANT,JASO-ISO
101-3	36A11113W01	CAP,RUBBER(A)
101-4	03A11112W01	BOLT,HEX.M5(A)
102	15D00529K02	CASE,INNER
103	15D01798K01	CARRYING,CASE

Symbol No.	Part No.	Description
○ 104	01T15359Y10	ASSY,WIRE PWR 7874R
● 104	01T15359Y10	ASSY,WIRE PWR 7874R
△ 104	01T15359Y11	ASSY,WIRE PWR 7871R
▲ 104	01T15359Y11	ASSY,WIRE PWR 7871R
□ 104	01T15359Y11	ASSY,WIRE PWR 7871R
105	68P01434K85	O/M AOEU AODN

NOTE : ○ : For CDM-7874RB Model Only, ● : For CDM-7872RB Model Only, △ : For CDM-7871R Model Only,
▲ : For CDM-7871RM Model Only, □ : For CDE-7860R Model Only, Others : Common.

Packing Method View

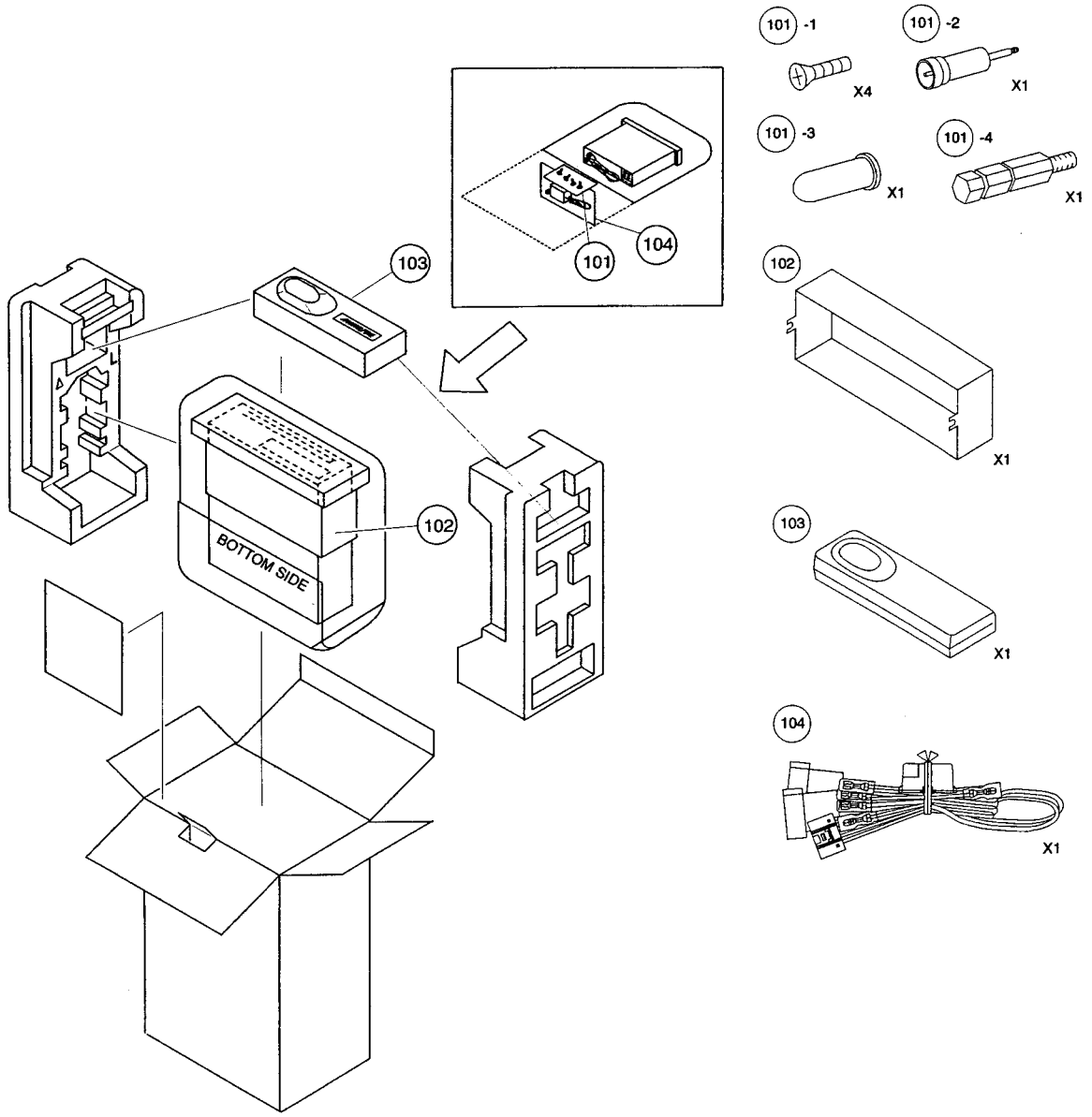

Specifications

<FM RADIO>

Intermediate Frequency	10.7±0.1MHz
Frequency Range	87.5~108MHz
Usable Sensitivity (Mono, 30dB S/N, at 98.1MHz)	20.2dBf
-3dB Limiting Sensitivity (at 98.1MHz)	20.2dBf
Residual Noise (Ref. 400Hz (WID), at 98.1MHz)	25±10dB
S/N Ratio (at 98.1MHz)	Stereo : 50dB
	Mono : 55dB
Image Rejection (at 106.1MHz)	40dB
IF Rejection (at 90.1MHz)	60dB
Distortion (Input 60dBμ, at 98.1MHz)	1%
Frequency Response (Ref. 400Hz, at 98.1MHz)	100Hz : 0±3dB
	10kHz : -12±3dB
Stereo Separation (1kHz, at 98.1MHz)	20dB
PS Sensitivity (at 98.1MHz)	36.2dBf

<MW RADIO>

Intermediate Frequency	1st. : 10.7MHz
	2nd. : 450kHz
Frequency Range	531~1,602kHz
Usable Sensitivity (20dB S/N, at 999kHz)	34dB
S/N Ratio (at 999kHz)	44dB
Image Rejection (at 603kHz)	40dB
IF Rejection (at 603kHz)	50dB
Distortion (at 999kHz)	1.5%
Frequency Response (Ref. 400Hz, at 999kHz)	100Hz :-3±4dB
	4kHz : -12±4, -8dB

<LW RADIO>

Intermediate Frequency	1st. : 10.7MHz
	2nd. : 450kHz
Frequency Range	153~281kHz
Usable Sensitivity (20dB S/N, at 216kHz)	38dB
S/N Ratio (at 216kHz)	45dB
Image Rejection (at 270kHz)	40dB
IF Rejection (at 162kHz)	50dB
Distortion (at 216kHz)	1.5%
Frequency Response (Ref. 400Hz, at 216kHz)	100Hz :-3±4dB
	4kHz : -12±4, -8dB

CDM-7874RB/CDM-7872RB/CDM-7871R
CDM-7872RM/CDE-7860R

<CD SECTION>

System ..... Optical (Compact Disc System)
Quantizing Bit Number ..... 16bit Linear system
Channels ..... 2 Channels
Channel Balance (1kHz, TCD-782) ..... 0±3dB
Distortion (1kHz, TVD-782) 0.1%
Frequency Response (Ref. 1kHz, TCD-782) ..... 17Hz : 0±3dB
127Hz : 0±2dB
10.007kHz : 0±2dB
19.997kHz : 0±4dB
S/N Ratio (TCD-782) 95dB
Separation (1kHz, TCD-782) 55dB
De-Emphasis (Ref. 1kHz, TCD-782) ..... 4kHz : -20±3dB
16kHz : -20±3dB

<Pickup>

Wave Length 795nm
Laser Power ..... CLASS I

<GENERAL>

Power Supply DC14.4V
Power Output (Ref. FM Mode/SP-OUT, T.H.D. 10%) /Impedance 16W/ch/4ohm
Pre Output (TCD-782 (0dB, 1kHz), T.H.D. 1%,
SUB-W OFF Mode : Rear Pre-Out Mode) /Impedance ..... 2V±2.5dBV/ch/10kohm
SUB-W Output (TCD-782 (0dB, 1kHz), T.H.D. 1%,
SUB-W STEP+15) /Impedance ..... 4V±2.5dBV/ch/10kohm (○)
Dimensions (W×H×D) ..... Chassis : 178×50×158mm
Nose : 188×58×24.4mm (○)
Nose : 188×58×20.6mm (●△▲□)
Weight 1.5kg

NOTES : Due to Continuing product improvement, specifications and designs are subject to change without notice.
○ : For CDM-7874RB Model Only, ● : For CDM-7872RB Model Only, △ : For CDM-7871R Model Only,
▲ : For CDM-7871RM Model Only, □ : For CDE-7860R Model Only, Others : Common.

Adjustment Procedures

1. FM/AM SECTION

(1) Dummy Antenna Circuit

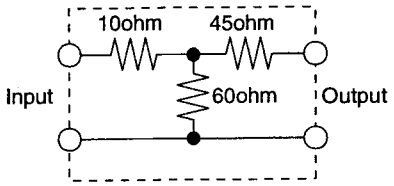

For 50 ohm FM Signal Generator Figure 1

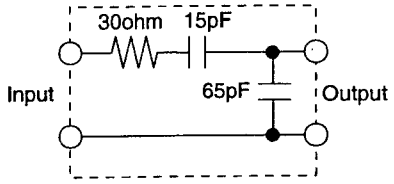

For 50 ohm AM Signal Generator Figure 2

(2) Connections

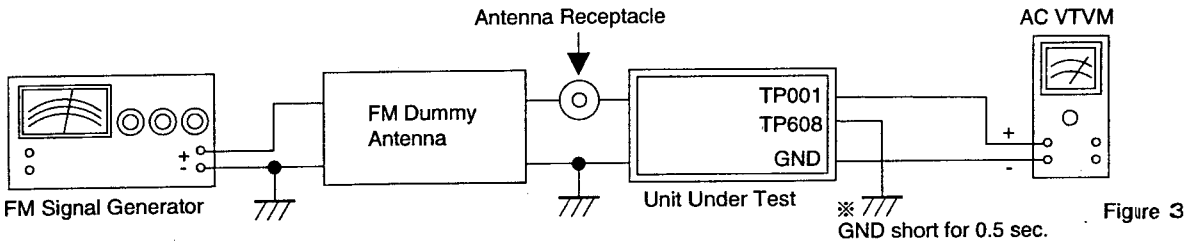

Figure 3

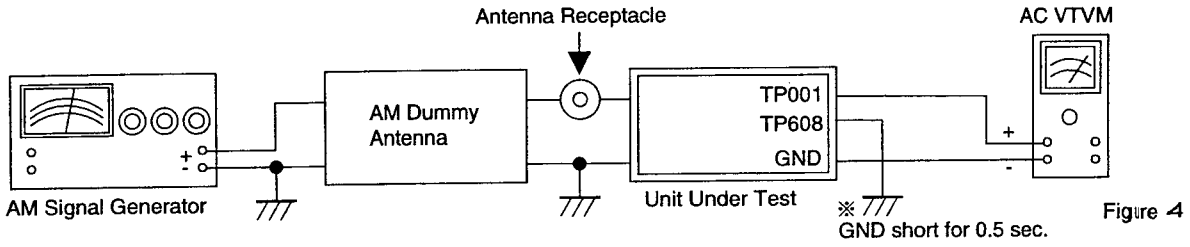

Figure 4

(3) Control Settings

Power Switch	ON	Band Switch	FM/AM (MW/LW)
Fader Control	Center Position	LOUD/SUB-W	OFF
Balance Control	Center Position	Others	OFF

(4) Adjustment Procedures

Step	Description	Connection	Signal Generator	Dial Control	Test Point / P.W.Board Coordinates	Adjustment
1	FM Seek Stop Auto Adjustment	Figure 3	87.5MHz, 26dBμ (Mod. OFF)	87.5MHz	TP001 (1-C) TP608 (4-B)	Auto Adjustment : After setting up of Signal Genarator, short GND and TP608 (Pull-Down) for 1 seconds. (SPEC) 1.5±0.1V
2	MM Seek Stop Auto Adjustment	Figure 4	999kHz, 34dBμ (Mod. OFF)	999kHz	TP001 (1-C) TP608 (4-B)	Auto Adjustment : After setting up of Signal Genarator, short GND and TP608 (Pull-Down) for 1 seconds. (SPEC) 1.0±0.1V
3	LM Seek Stop Auto Adjustment	Figure 4	216kHz, 34dBμ (Mod. OFF)	216kHz	TP001 (1-C) TP608 (4-B)	Auto Adjustment : After setting up of Signal Genarator, short GND and TP608 (Pull-Down) for 1 seconds. (SPEC) 1.0±0.1V

Extension Cable

● When repairing or measuring the voltage of this unit, connect with the Extension Cable as shown in below.

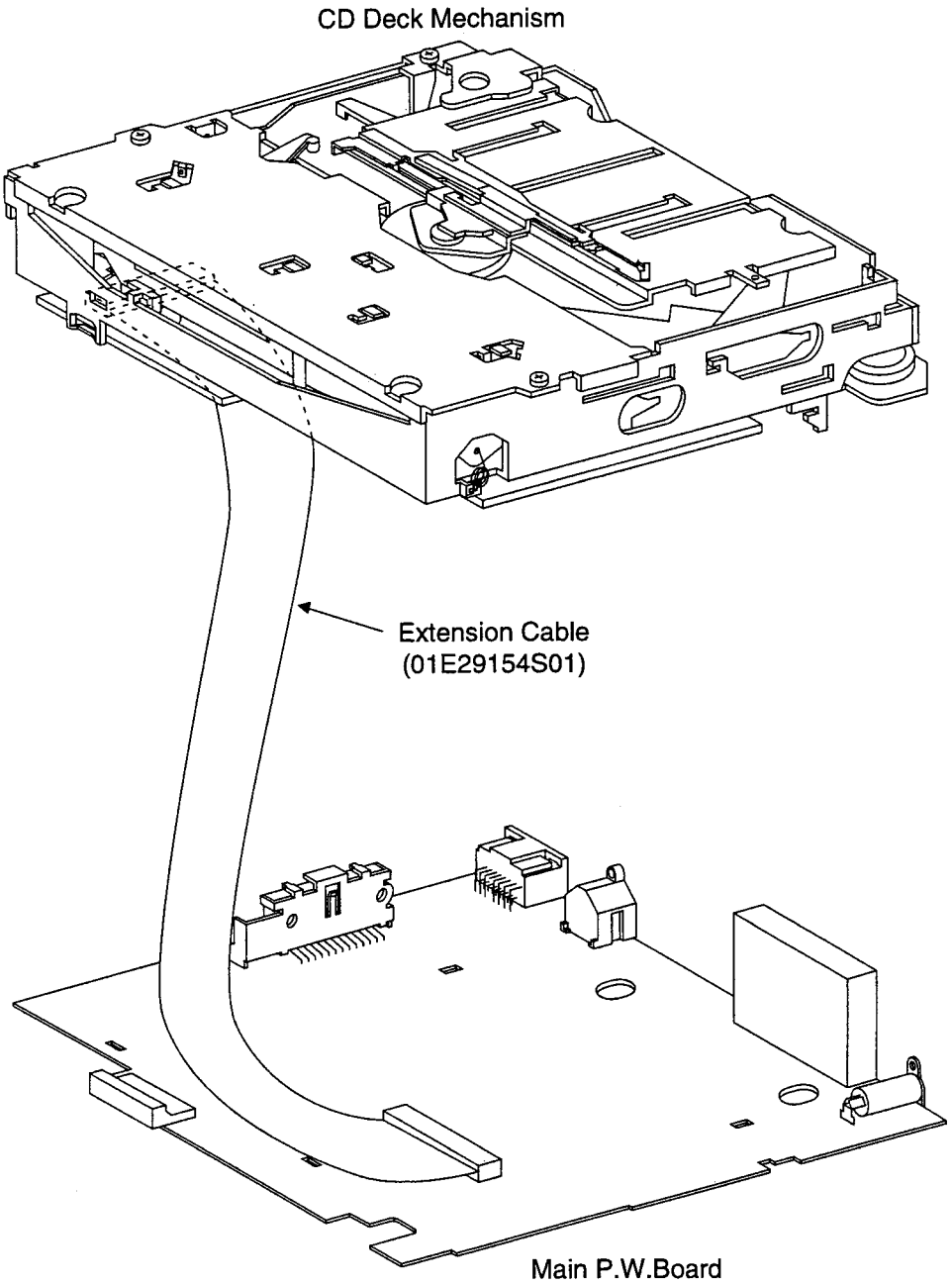

CDM-7874RB/CDM-7872RB/CDM-7871R/
CDM-7871RM/CDE-7860R

Block Diagram

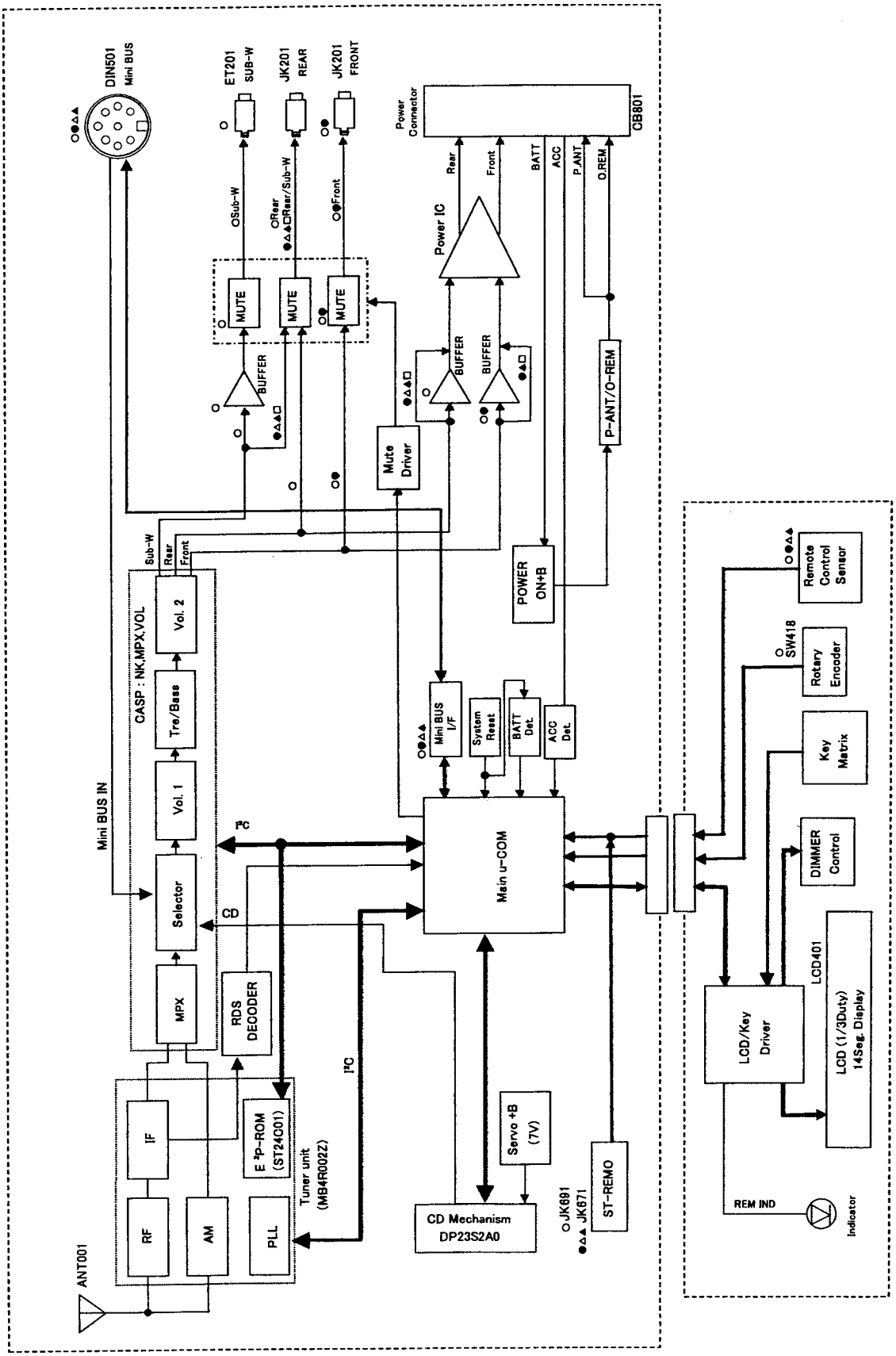

NOTE : ○ : For CDM-7874RB Model Only, ● : For CDM-7872RB Model Only, △ : For CDM-7871R Model Only,
▲ : For CDM-7871RM Model Only, □ : For CDE-7860R Model Only, Others : Common.

Parts Layout on P.W.Boards and Wiring Diagram (1/5)

Dark Gray : Component Side Pattern
Gray : Foil Side Pattern

Main P.W.Board (Component Side View)

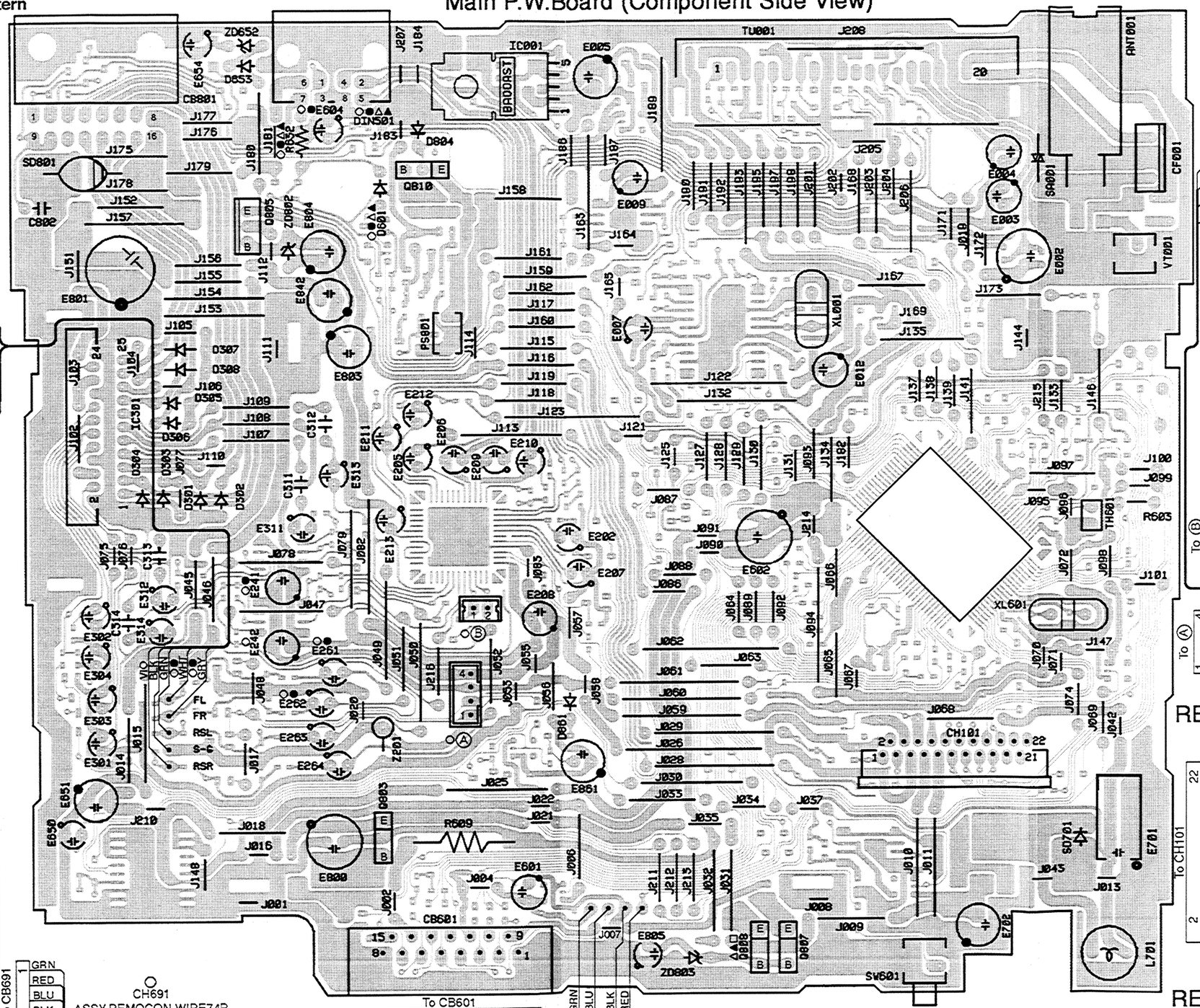

1

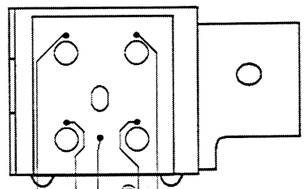

2

○●JK201
ASSY,CONN NLT2068 (FRONT/REAR)
(Foil Side View)

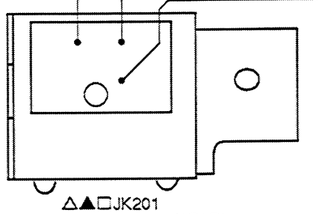

3

△▲□JK201
ASSY,CONN NLT2069 (REAR)
(Foil Side View)

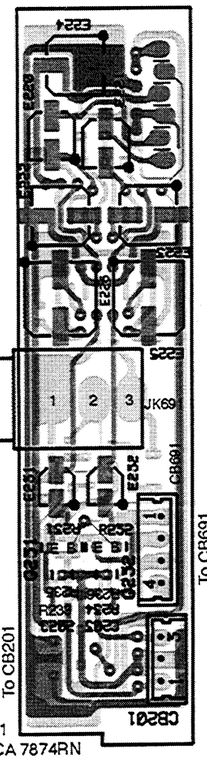

4

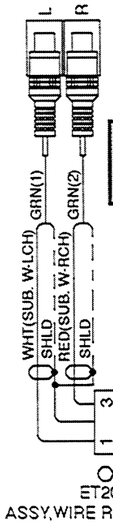

5

○PREOUT &
REMO-CON P.W.Board
(Component Side View)

NOTE:○:For CDM-7874RB Model Only,
●:For CDM-7872RB Model Only,
△:For CDM-7871R Model Only,
▲:For CDM-7871RM Model Only,
□:For CDE-7860R Model Only,
Others:Common.

●△▲
REMO-CON P.W.Board
(Component Side View)

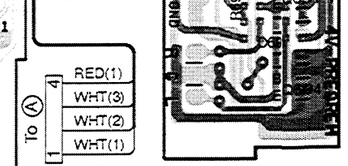

○PREOUT &
REMO-CON P.W.Board
(Foil Side View)

●△▲
REMO-CON P.W.Board
(Foil Side View)

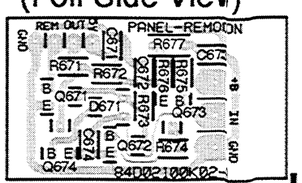

Parts Layout on P.W.Boards and Wiring Diagram (2/5)

Main P.W.Board (Foil Side View)

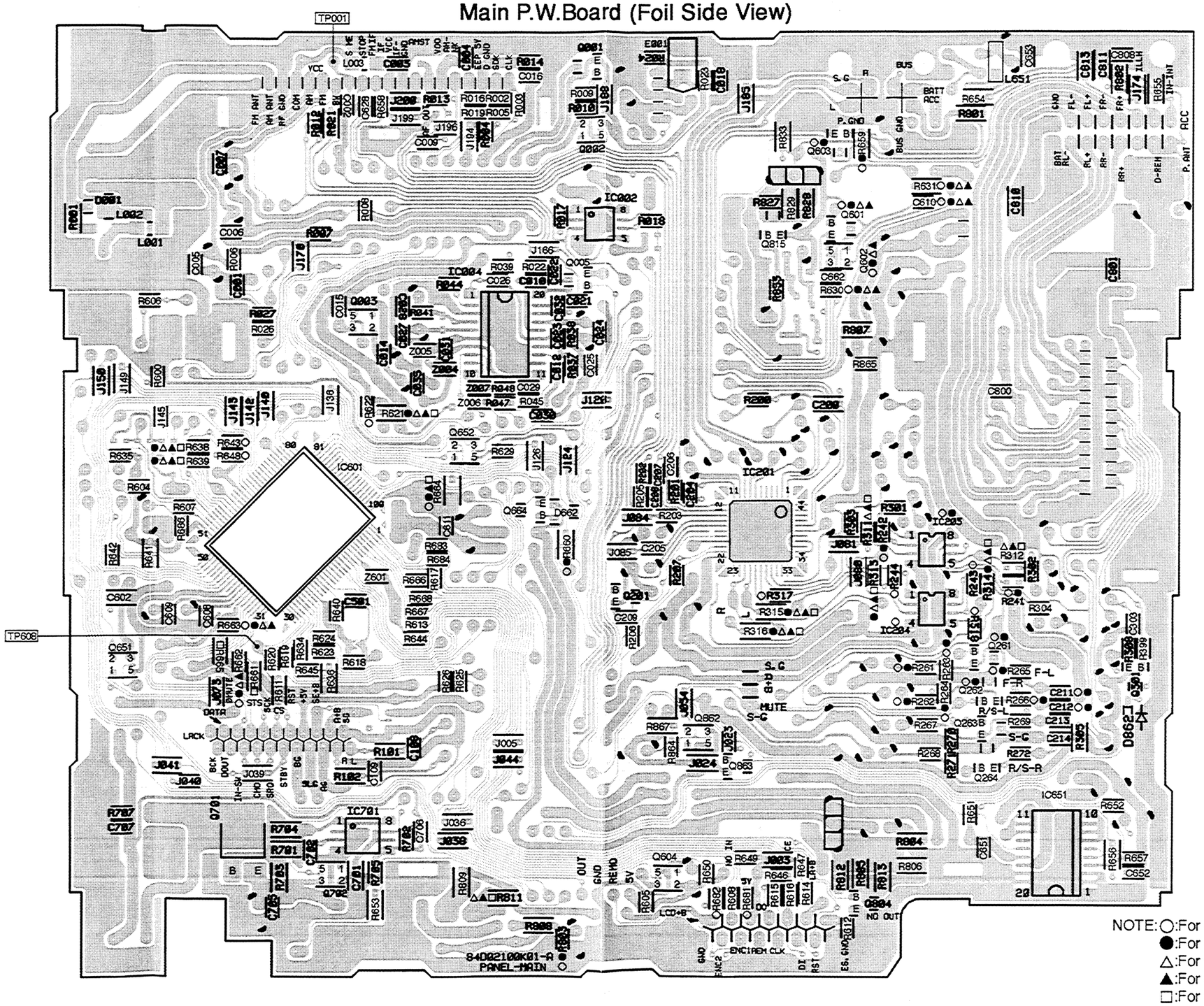

NOTE: ○:For CDM-7874RB Model Only,
●:For CDM-7872RB Model Only,
△:For CDM-7871R Model Only,
▲:For CDM-7871RM Model Only,
□:For CDE-7860R Model Only,
Others:Common.

Gray : Foil Side Pattern

Parts Layout on P.W.Boards and Wiring Diagram (3/5)

(CDM-7874RB Model Only)

Front P.W.Board (Component Side View)

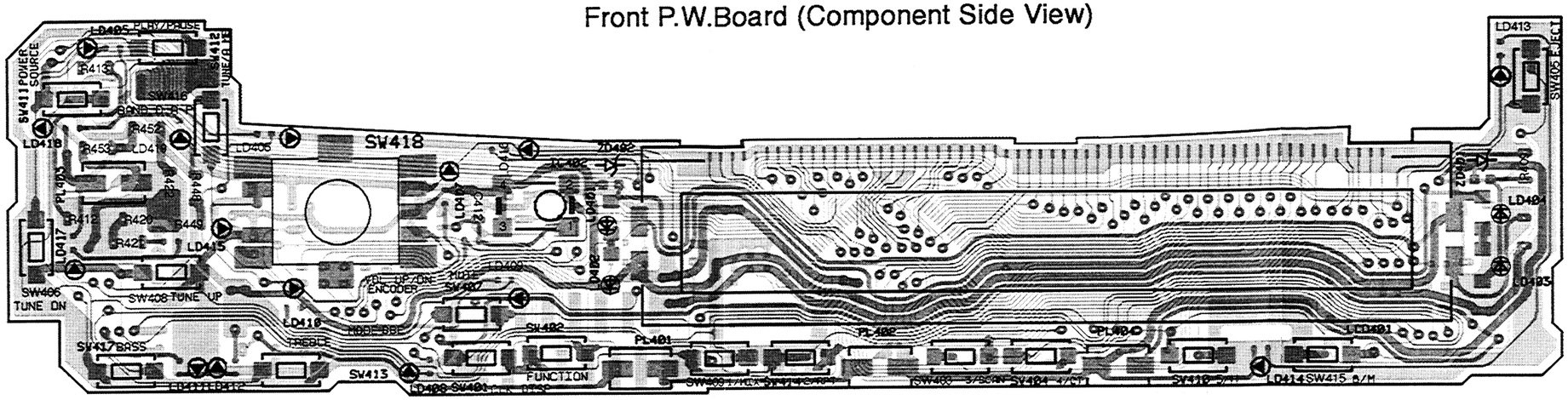

Front P.W.Board (Foil Side View)

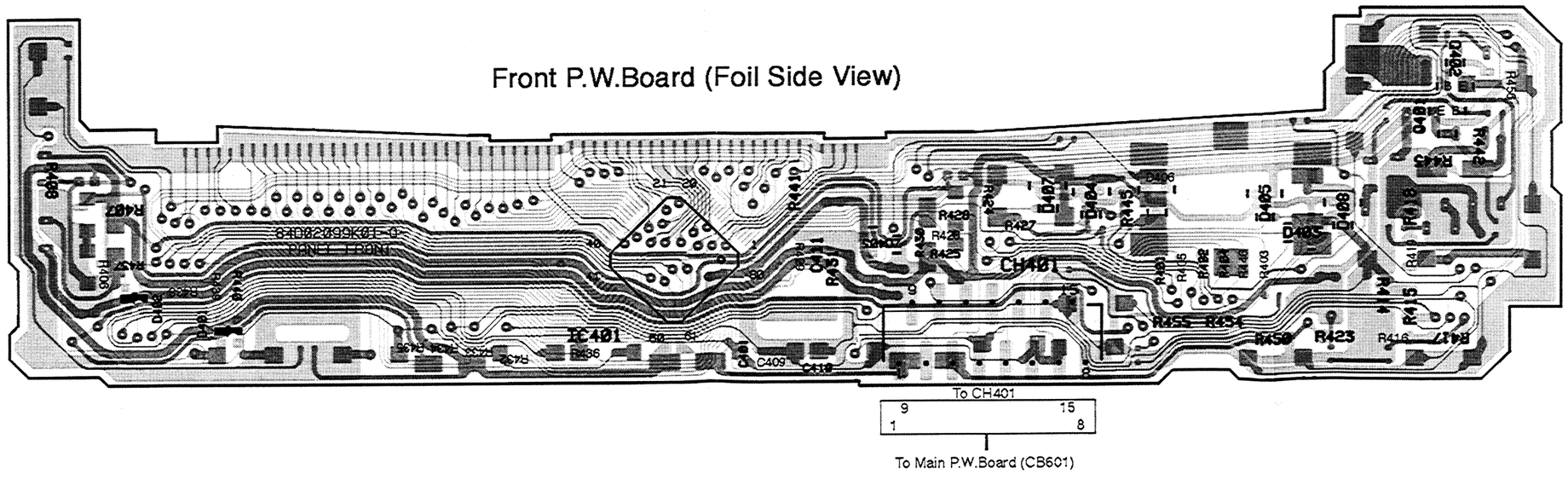

Dark Gray : Component Side Pattern
Gray : Foil Side Pattern

Parts Layout on P.W.Boards and Wiring Diagram (4/5)

(CDM-7872RB/CDM-7871R/CDM-7871RM/CDE-7860R Model Only)

NOTE: ●:For CDM-7872RB Model Only.
△:For CDM-7871R Model Only.
▲:For CDM-7871RM Model Only.
□:For CDE-7860R Model Only.
Others:Common.

Front P.W.Board (Component Side View)

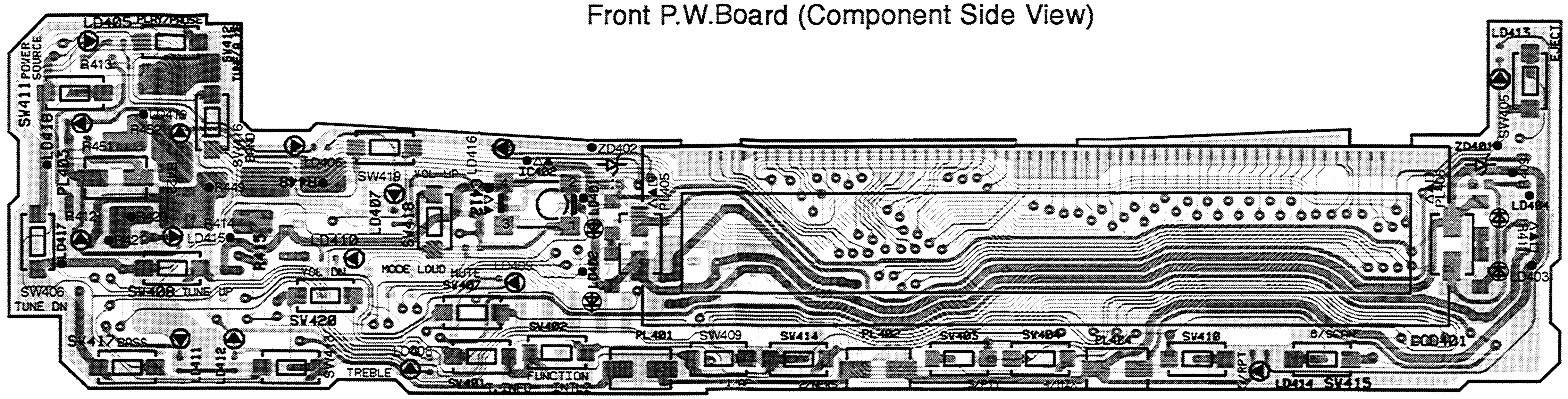

Front P.W.Board (Foil Side View)

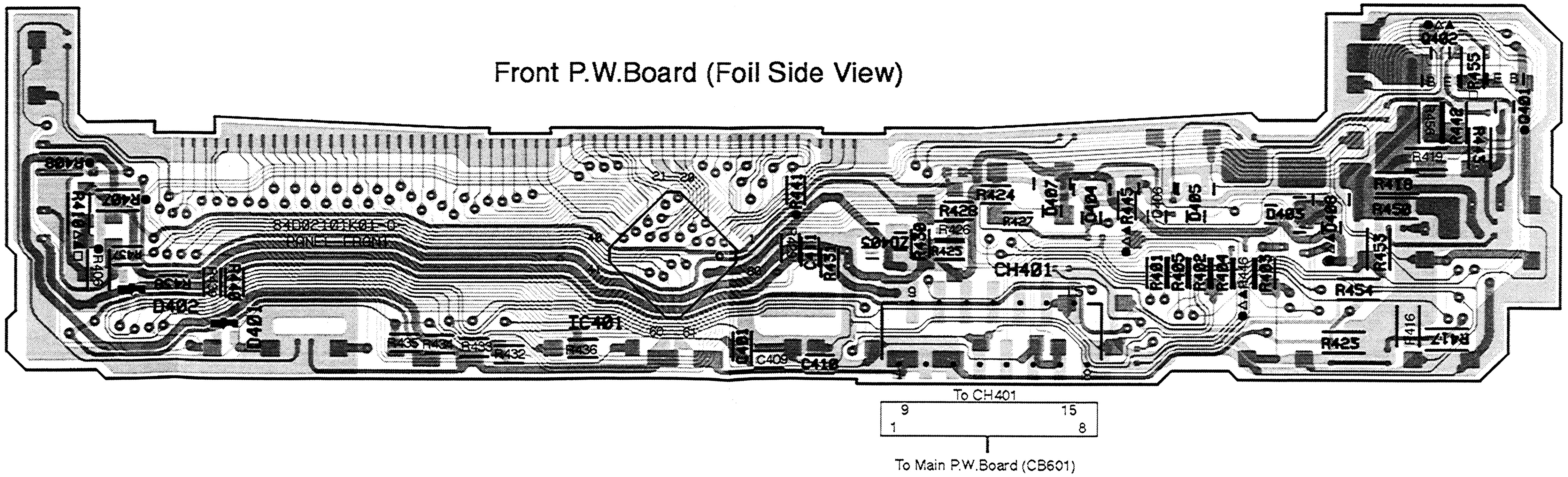

Dark Gray : Component Side Pattern
Gray : Foil Side Pattern

A | B | C | D | E | F | G

Parts Layout on P.W.Boards and Wiring Diagram (5/5)

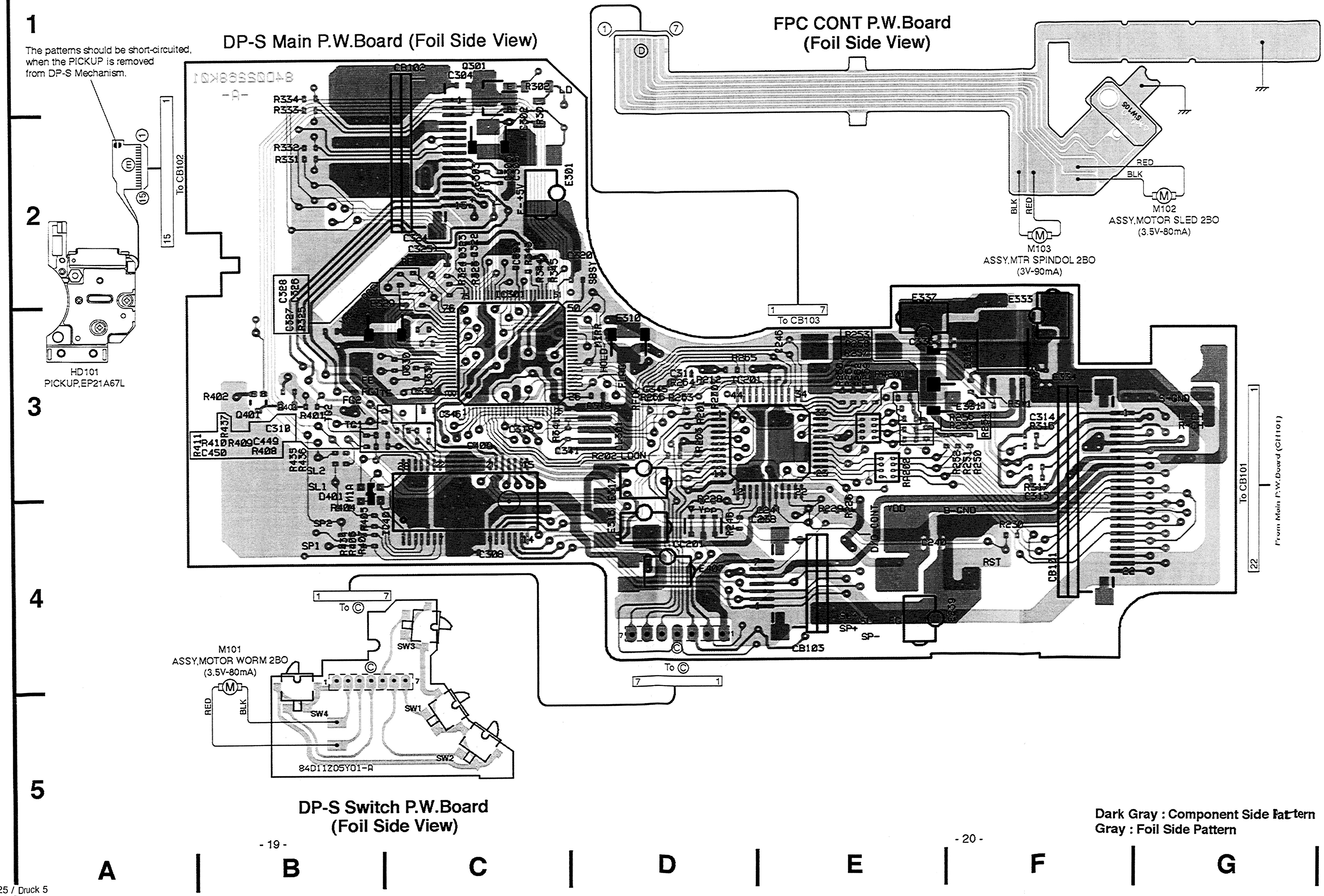

Dark Gray : Component Side Pattern
Gray : Foil Side Pattern

CDM-7874RB/CDM-7872RB/CDM-7871R
/CDM-7871RM/CDE-7860R

Schematic Diagram(1/8)

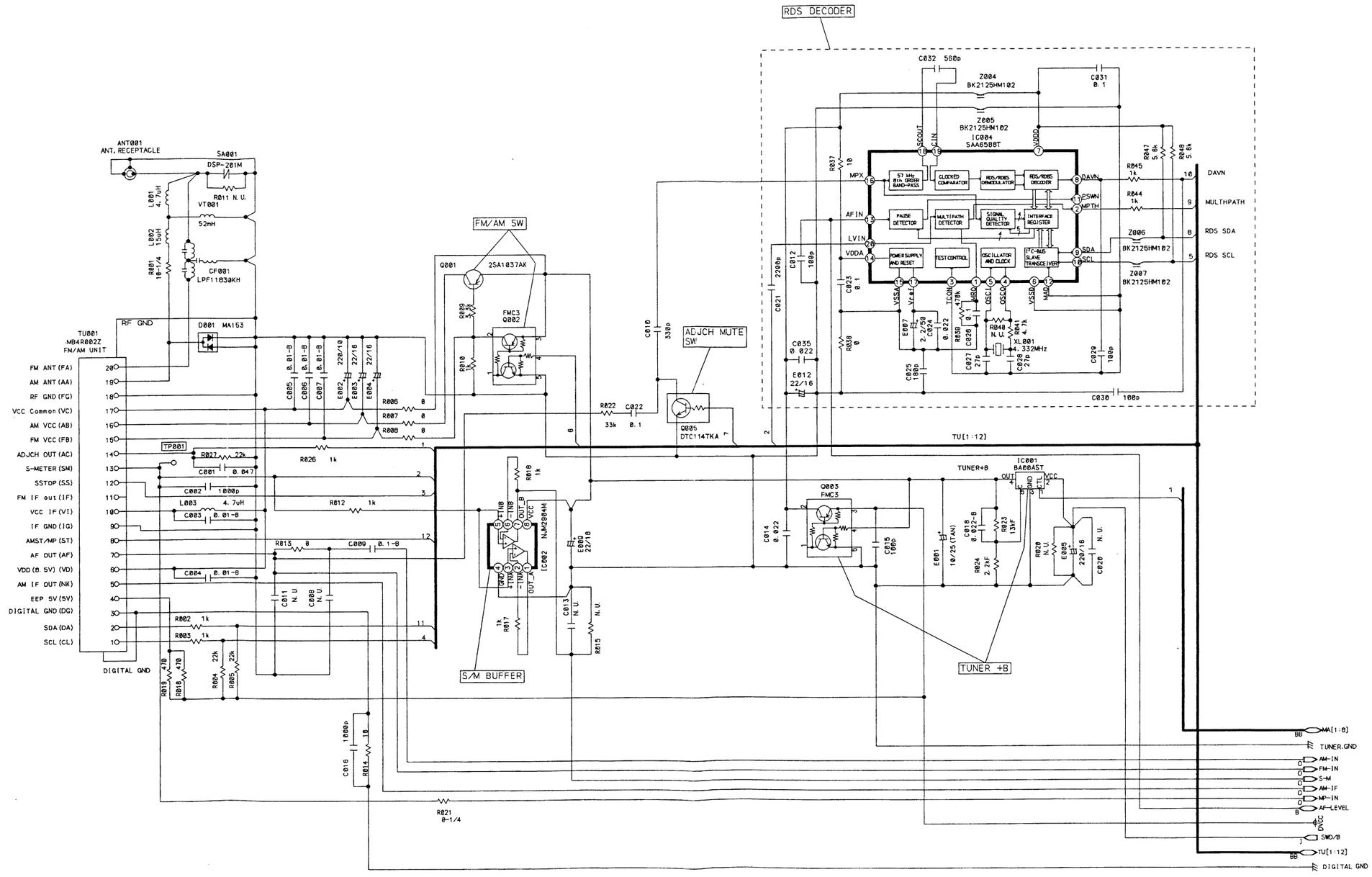

Main P.W. Board(1/4)
NOTE N.U. is Not Used Parts.

Schematic Diagram (2/8)

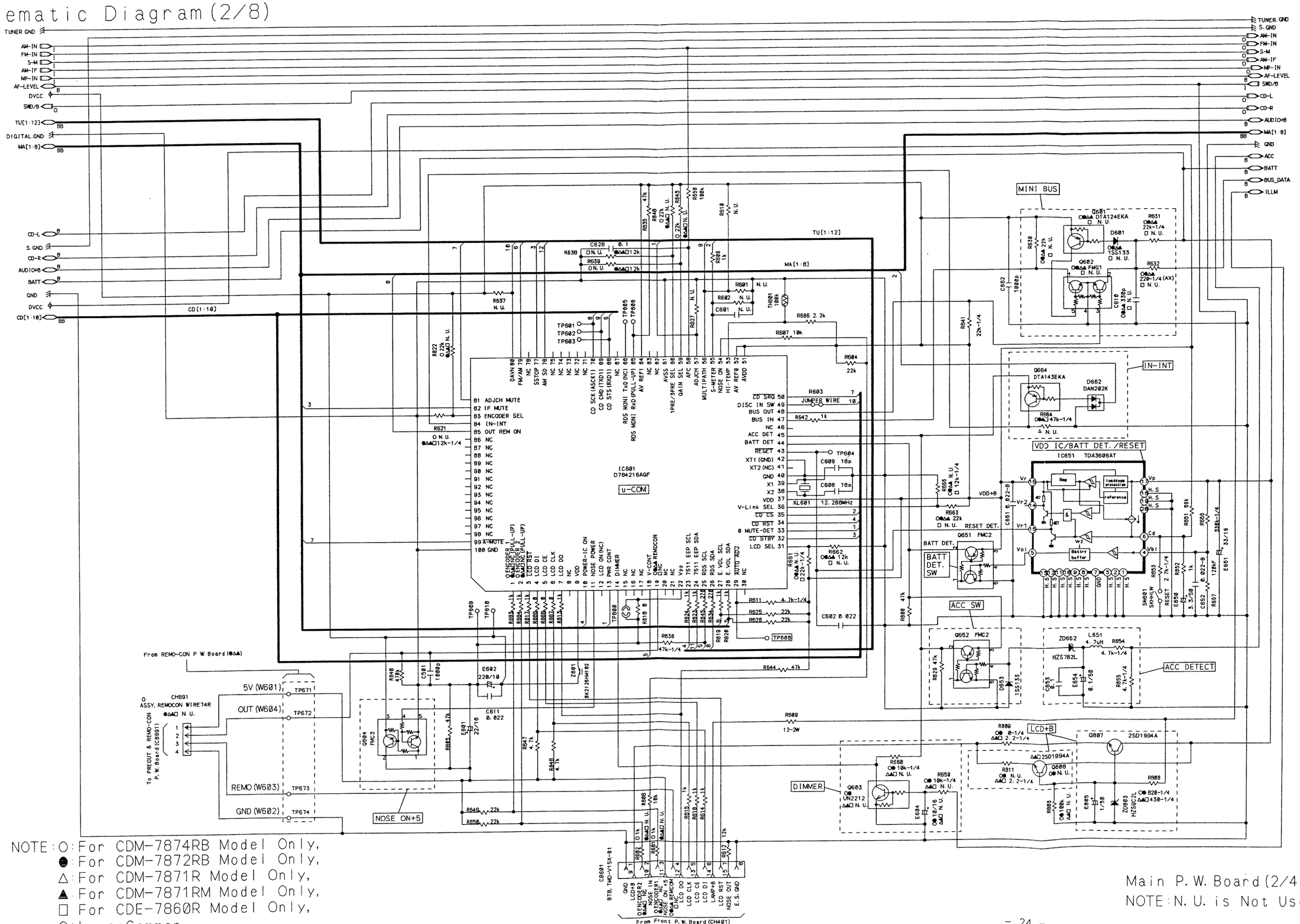

NOTE: ○: For CDM-7874RB Model Only,
● : For CDM-7872RB Model Only,
△ : For CDM-7871R Model Only,
▲ : For CDM-7871RM Model Only,
□ For CDE-7860R Model Only,
Others : Common.

Main P.W.Board (2/4)
NOTE : N.U. is Not Used Parts.

CDM-7874RB/CDM-7872RB/CDM-7871R
/CDM-7871RM/CDE-7860R

Schematic Diagram (3/8)

NOTE: O: For CDM-7874RB Model Only,
● For CDM-7872RB Model Only,
△: For CDM-7871R Model Only,
▲: For CDM-7871RM Model Only,
□: For CDE-7860R Model Only,
Others: Common.

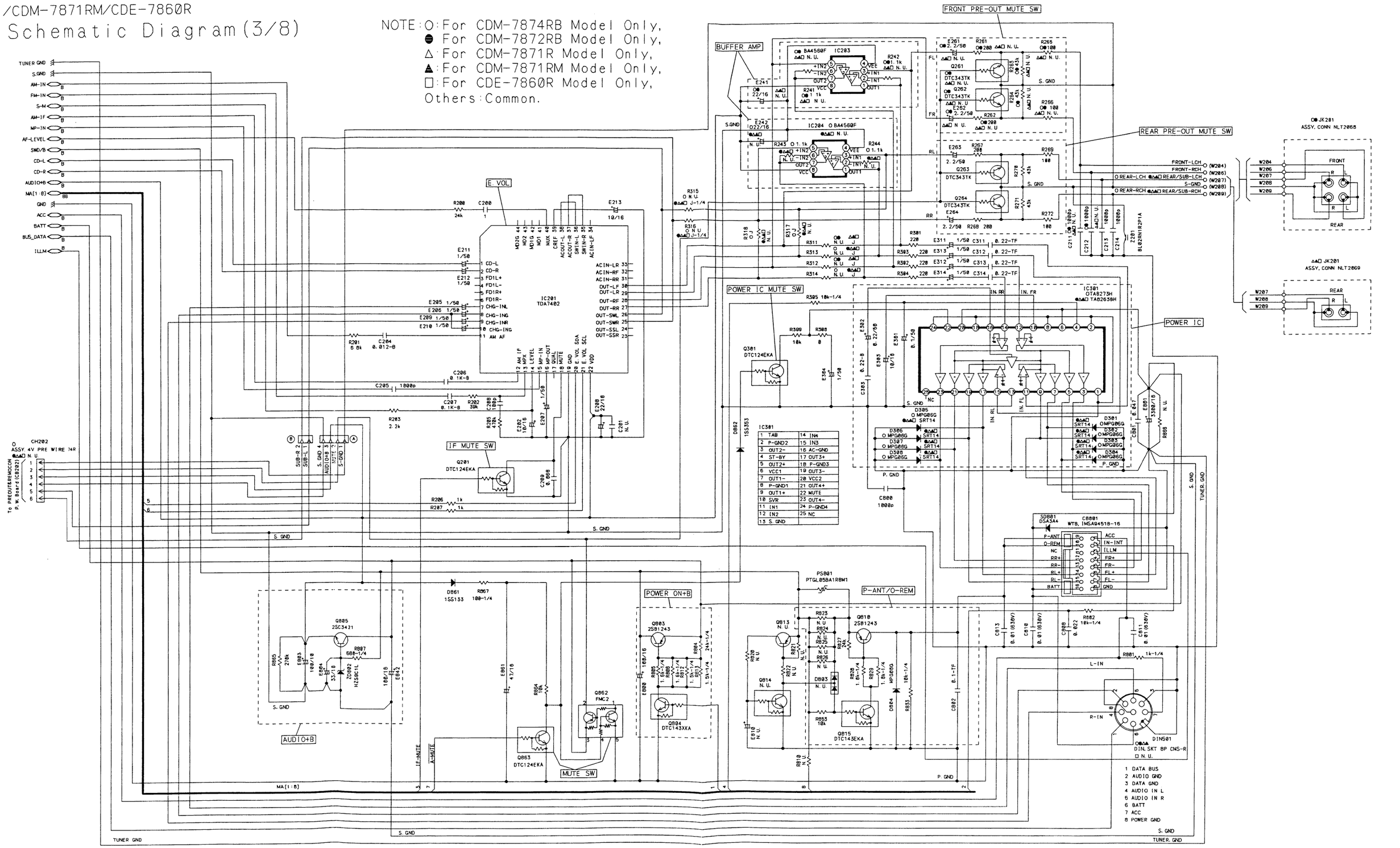

Main P.W. Board (3/4)
NOTE: N.U. is Not Used Parts.

Schematic Diagram (4/8)

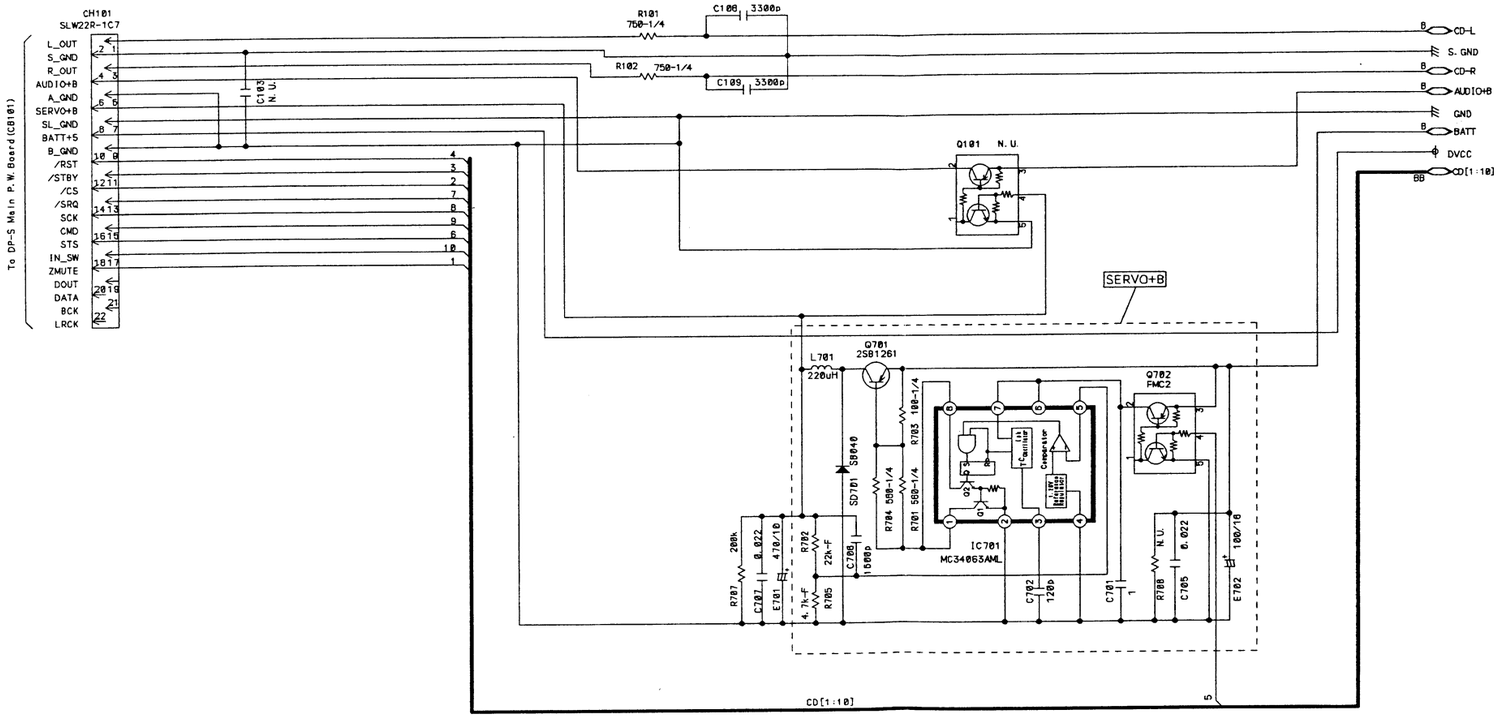

Main P. W. Board (4/4)
NOTE : N. U. is Not Used Parts.

CDM-7874RB/CDM-7872RB/CDM-7871R
/CDM-7871RM/CDE-7860R

Schematic Diagram (5/8)

<CDM-7874RB Model Only>

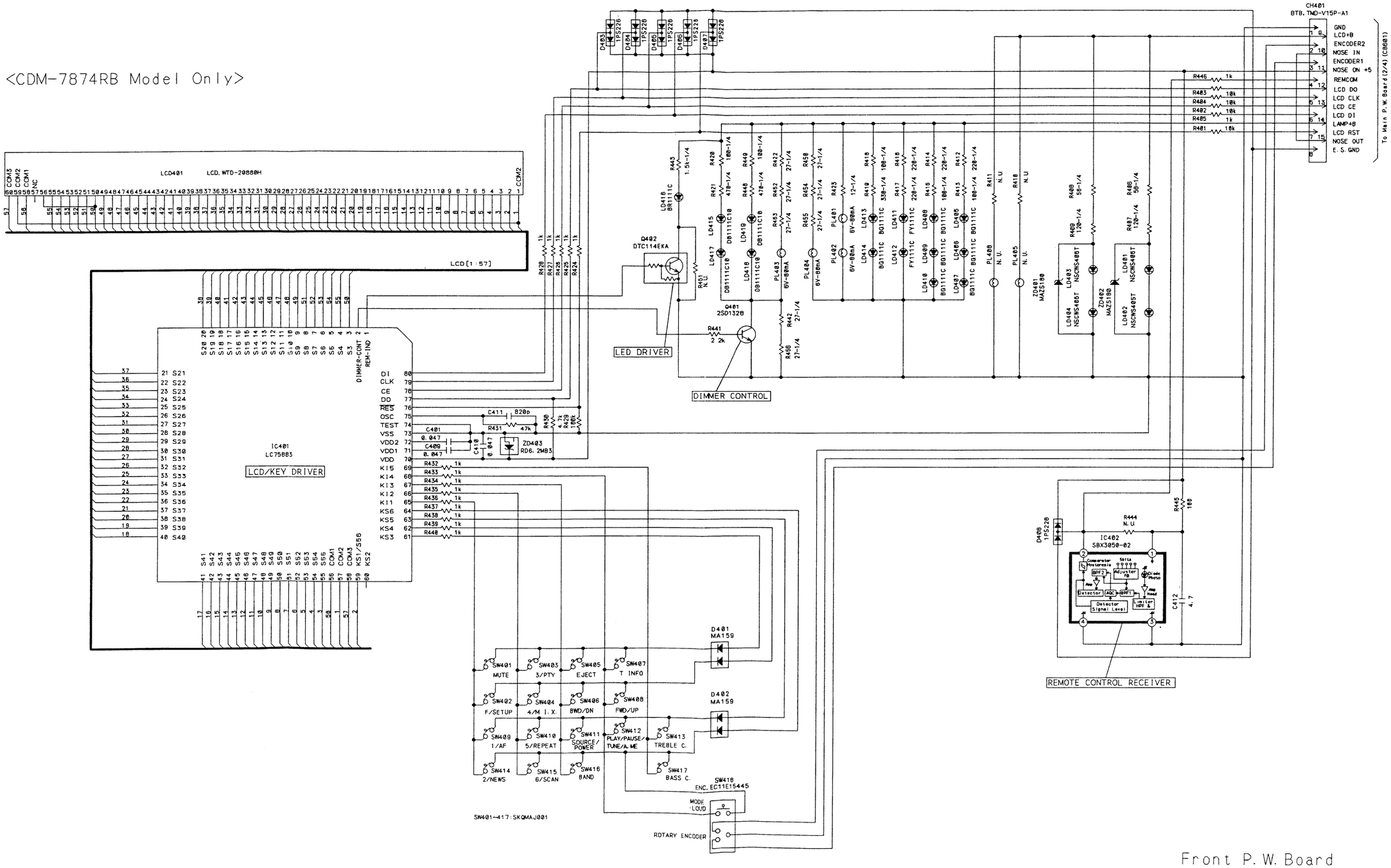

Front P. W. Board

NOTE N. U. is Not Used Parts.

Schematic Diagram(6/8)

<CDM-7872RB/CDM-7871R/CDM-7871RM/CDE-7860R Model Only>

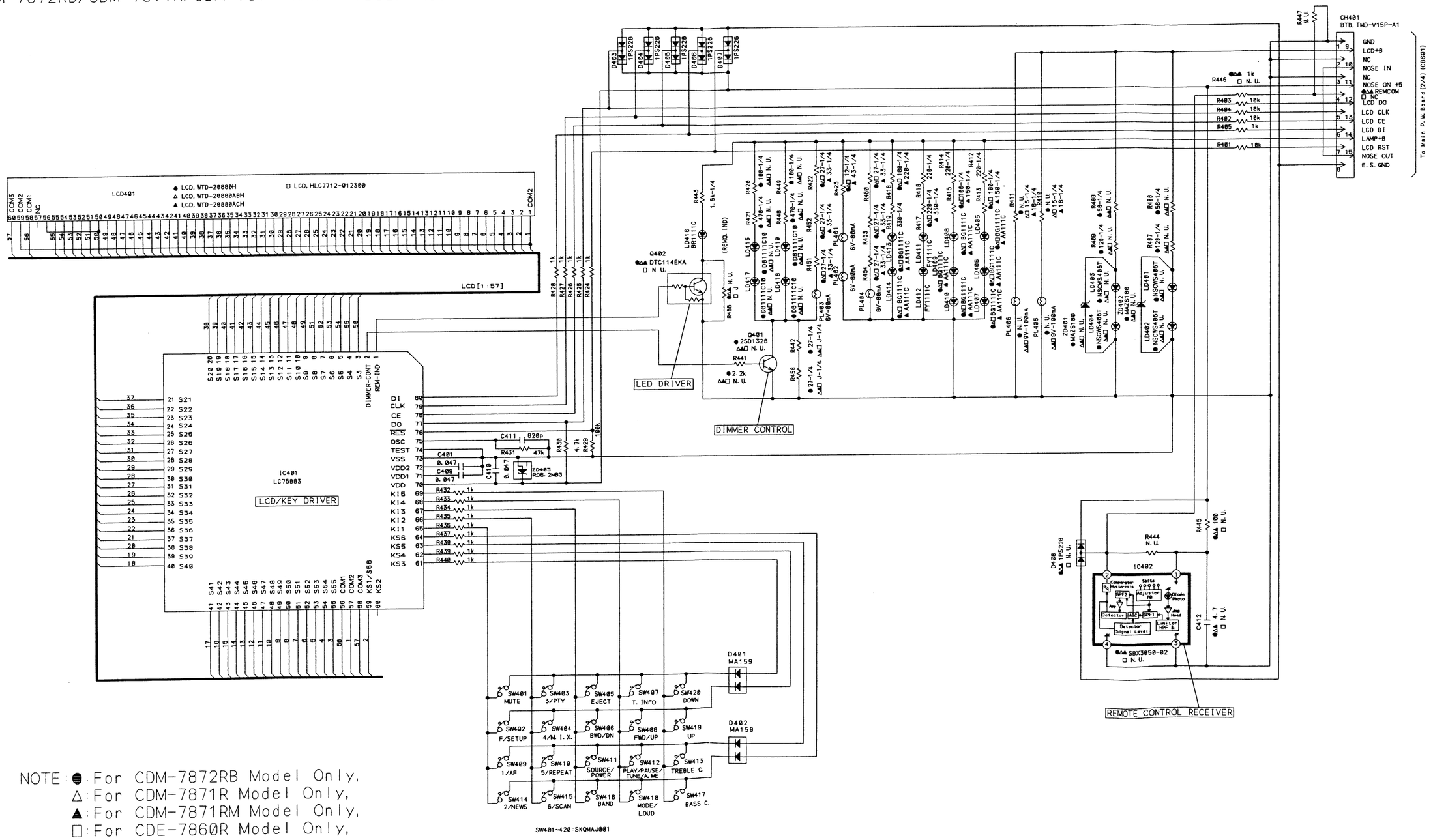

NOTE : ● : For CDM-7872RB Model Only,
△ : For CDM-7871R Model Only,
▲ : For CDM-7871RM Model Only,
□ : For CDE-7860R Model Only,
Others : Common.

CDM-7874RB/CDM-7872RB/CDM-7871R
/CDM-7871RM/CDE-7860R

Schematic Diagram (7/8)

<CDM-7874RB Model Only>

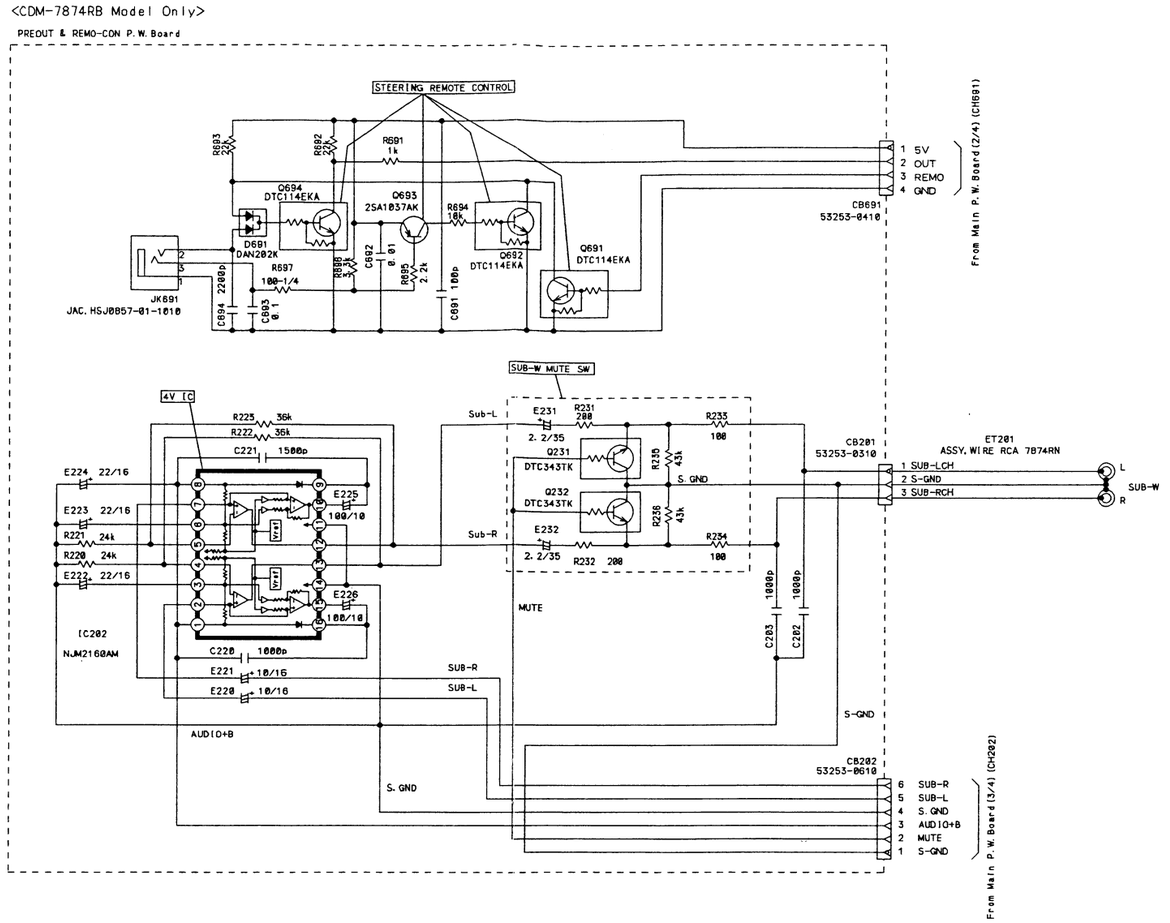

<CDM-7872RB/CDM-7871R/CDM-7871RM Model Only>

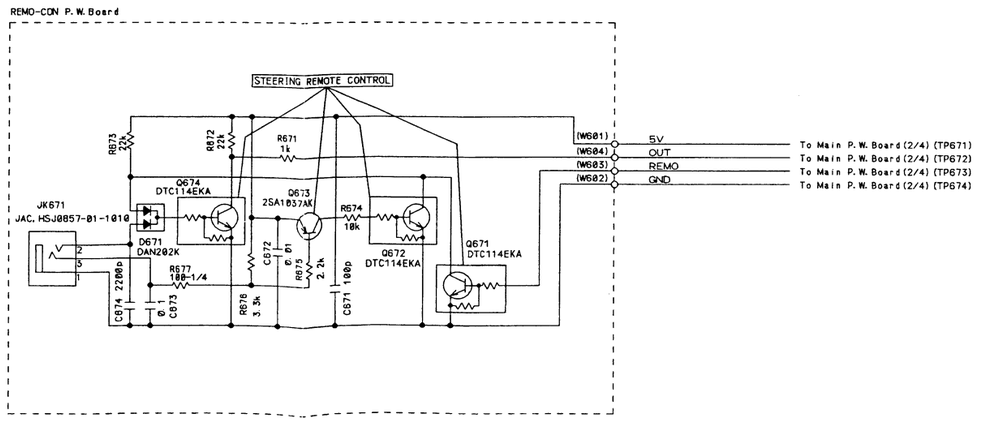

NOTE : N. U. is Not Used Parts.

Schematic Diagram (8/8)

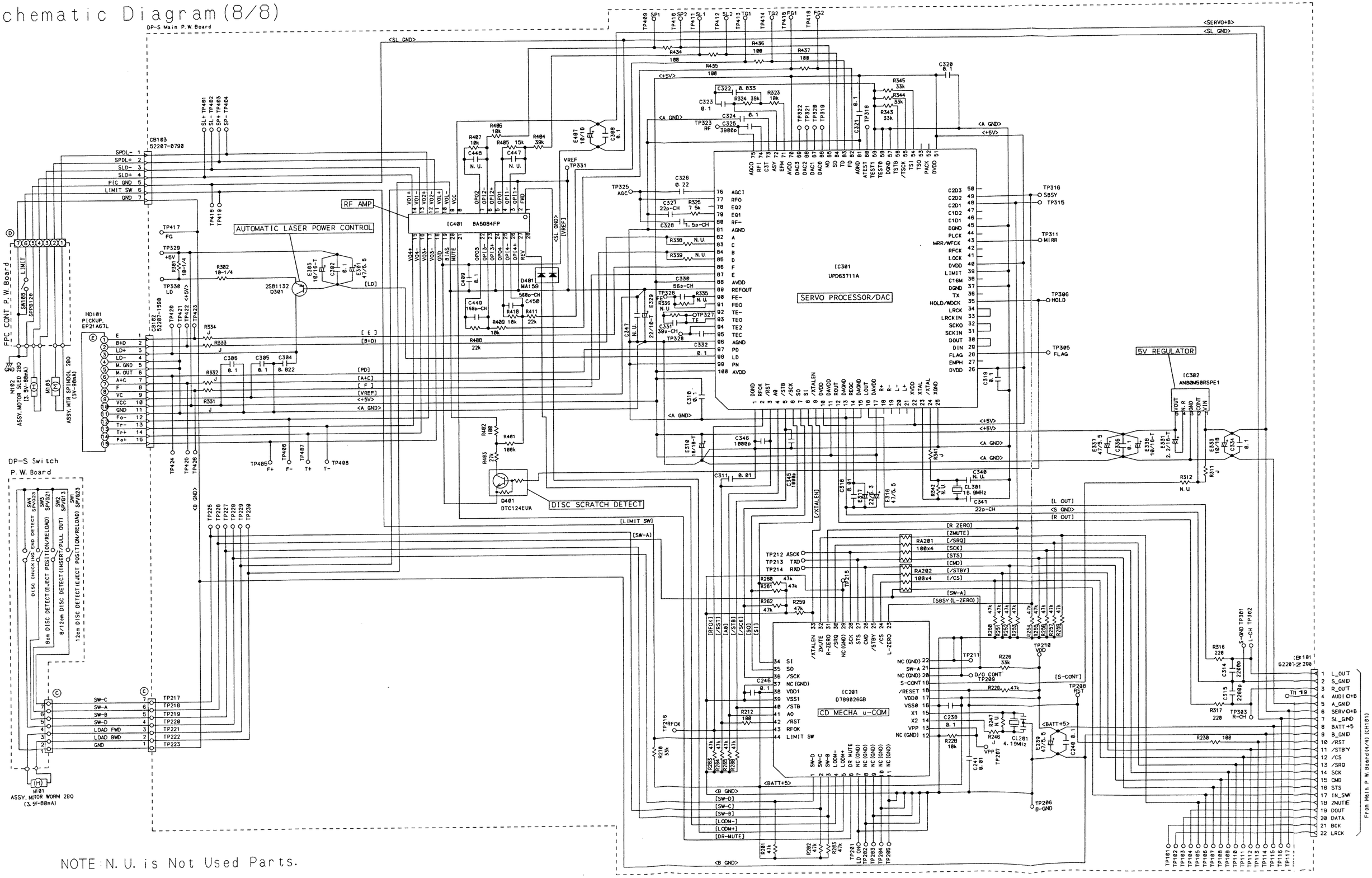

NOTE : N. U. is Not Used Parts.

Terminal Voltage of IC/TR

IC001		
1	4.9	RADIO
2	14.1	
3	0	
4	8.5	
5	1.2	

IC002			
1	4.1	5	4.1
2	4.1	6	4.1
3	4.1	7	4.1
4	0	8	8.5

IC004							
1	0	6	0	11	NC	16	2.5
2	0	7	4.9	12	0	17	2.5
3	0	8	4.9	13	2.4	18	2.4
4	2.4	9	4.9	14	4.8	19	2.5
5	2.2	10	4.4	15	0	20	2.5

IC201							
1	4.4	12	4.4	23	NC	34	NC
2	4.4	13	4.4	24	NC	35	4.4
3	NC	14	5	25	4.5	36	4.4
4	NC	15	0.2	26	4.5	37	4.4
5	NC	16	4.5	27	4.5	38	4.5
6	NC	17	NC	28	4.5	39	4.5
7	4.4	18	3.7	29	4.5	40	4.5
8	4.4	19	0	30	4.5	41	NC
9	4.4	20	0.3	31	NC	42	NC
10	4.4	21	0.3	32	NC	43	NC
11	4.4	22	9	33	NC	44	NC

○IC202			
1	8.9	9	0
2	3.1	10	0.83
3	4.6	11	0
4	3.1	12	7.7
5	3.1	13	7.7
6	4.6	14	0
7	3.1	15	0.8
8	8.9	16	8.3

○●IC203	
1	4.5
2	4.5
3	4.5
4	0
5	4.5
6	4.5
7	4.5
8	9

○IC204	
1	4.5
2	4.5
3	4.5
4	0
5	4.5
6	4.5
7	4.5
8	9

IC301								
1	0	8	0	15	1.3	22	3.9/0.9	POWER IC MUTE OFF/ON
2	0	9	7.4	16	1.2	23	7.4	
3	7.4	10	8.8	17	7.4	24	0	
4	5	11	1.3	18	0	25	NC	
5	7.4	12	1.3	19	7.4			
6	14.2	13	0	20	14.2			
7	7.4	14	1.3	21	7.4			

NOTE : ○ : For CDM-7874RB Model Only, ● : For CDM-7872RB Model Only, Others : Common.

IC401								
1	○●△▲ 4.9		20	2.5	41	2.5	62	5
	□NC		21	2.5	42	2.5	63	5
2	○● 4.6/0.1	ILLM L/H	22	2.5	43	2.5	64	5
	△▲□NC		23	2.5	44	2.5	65	0
3	2.5		24	2.5	45	2.5	66	0
4	2.5		25	2.5	46	2.5	67	0
5	2.5		26	2.5	47	2.5	68	0
6	2.5		27	2.5	48	2.5	69	0
7	2.5		28	2.5	49	2.5	70	5
8	2.5		29	2.5	50	2.5	71	3.3
9	2.5		30	2.5	51	2.5	72	1.7
10	2.5		31	2.5	52	2.5	73	0
11	2.5		32	2.5	53	2.5	74	0
12	2.5		33	2.5	54	2.5	75	3.9
13	2.5		34	2.5	55	2.5	76	4.5
14	2.5		35	2.5	56	2.5	77	5
15	2.5		36	2.5	57	2.5	78	0.7
16	2.5		37	2.5	58	2.5	79	0.2
17	2.5		38	2.5	59	2.5	80	1.3
18	2.5		39	2.5	60	NC		
19	2.5		40	2.5	61	5		

○●△▲IC402	
1	4.9
2	2
3	0
4	0

IC651					
1	0	8	0	15	5
2	0	9	0	16	5
3	0	10	0	17	14.2
4	3.8	11	0	18	0
5	5	12	0	19	0
6	2.8	13	0	20	0
7	0	14	NC		

IC701					
1	10	CD MODE	5	1.3	CD MODE
2	0		6	14.2	
3	0.9		7	14.2	
4	0		8	10.1	

IC601-1				
1	○4.9/0	VOL-24/Others	7	5
	●△▲□0		8	NC
2	○4.9/0	VOL-24/Others	9	5
	●△▲□0		10	5
3	5		11	5
4	1.3		12	NC
5	0.8		13	4.9
6	0.3		14	5

NOTE : ○ : For CDM-7874RB Model Only, ● : For CDM-7872RB Model Only, △ : For CDM-7871R Model Only,
▲ : For CDM-7871RM Model Only, □ : For CDE-7860R Model Only, Others : Common.

IC601-2					
13	4.9		57	0.2	
14	5		58	2.9	
15	NC		59	○5 ●△▲□0	
16	NC				
17	NC		60	○5 ●△▲□0	
18	0/5	AUDIO/CD			
19	○●△▲4.7/3.7 □NC	Remote Control OFF/ON	61	0	
			62	NC	
20	NC		63	NC	
21	NC		64	5	
22	0		65	5	
23	5		66	NC	
24	5		67	NC	
25	4.4		68	50	
26	4.9		69	0	
27	0		70	5	
28	0		71	NC	
29	5		72	NC	
30	NC		73	NC	
31	○●△▲0 □5		74	NC	
			75	NC	
32	5		76	4.7	
33	0/5	MUTE OFF/ON	77	3.9	
34	5		78	NC	
35	5		79	5	
36	○●△▲5 □0		80	4.9	
			81	0	
37	5		82	0	
38	2.7		83	○5 ●△▲□0	
39	2.5				
40	0		84	0	
41	NC		85	5	
42	0		86	NC	
43	5/0	Others/RESET	87	NC	
44	5		88	NC	
45	5		89	NC	
46	NC		90	NC	
47	5		91	NC	
48	0		92	NC	
49	0	DISC IN	93	NC	
50	5		94	NC	
51	5		95	NC	
52	5		96	NC	
53	4.9		97	NC	
54	2.5		98	NC	
55	5		99	5/0	MUTE OFF/ON
56	0		100	0	

NOTE : ○ : For CDM-7874RB Model Only, ● : For CDM-7872RB Model Only, △ : For CDM-7871R Model Only,
▲ : For CDM-7871RM Model Only, □ : For CDE-7860R Model Only, Others : Common.

CDM-7874RB/CDM-7872RB/CDM-7871R/ CDM-7871RM/CDE-7860R

	E	C	B	MODE
Q001	8.5	8.4/1.9	7.8/8.4	AM ON/OFF
Q005	0	0	0	
Q201	0	3.7	0	
○Q231	0	0	14.2/0	MUTE ON/OFF
○Q232	0	0	14.2/0	MUTE ON/OFF
○●Q261	0	0	0/14.1	MUTE OFF/ON
○●Q262	0	0	0/14.1	MUTE OFF/ON
Q263	0	0	0/14.1	MUTE OFF/ON
Q264	0	0	0/14.1	MUTE OFF/ON
Q301	0	4/0	0/4.1	POWER IC MUTE OFF/ON
○●Q401	0	0.1/3.4	0.7/0.1	ILLM L/H
○●△▲Q402	0.1	0.1	4.9	
○●△▲Q601	5	PS/0.3	PS/5	at connecting CHG/Others
○●Q603	0	5/0	0/10	DIMMER OFF/ON
Q664	5	0	5	
●△▲Q671	0	0.1	1.9	
●△▲Q672	0	0.1	0	
●△▲Q673	5	0	5	
●△▲Q674	0	4.7	0.1	
○Q691	0	0.1	1.9	
○Q692	0	0.1	0	
○Q693	5	0	5	
○Q694	0	4.7	0.1	
Q701	14.3/14.3	0/7.3	14.3/13.9	CD OFF/ON
Q803	14.2	14.1	12.4	
Q804	0	0.1/4.4	5/0	POWER ON/OFF
Q805	9	13.8	9.6	
Q807	8.8	14.1	9.5	
△▲□Q808	9	14.4	9.6	
Q810	14.2	14.2	13.6	P.ANT
Q815	0	0	4.8	
Q863	0	0/5	5/0	MUTE OFF/ON

	1	2	3	4	5	MODE
Q002	NC	8.4/1.7	8.5	5/0	0	FM ON/OFF
Q003	NC	4.9	5	8.5	0	
○●△▲Q602	4/5.1	13.8/10.8	0.1	0.1	0.1/1.2	MINI BUS
Q604	NC	5/0	5	5/0	0	NOSE POWER ON/OFF
Q651	NC	5	5	5	0	
Q652	NC	5	5	5	0	
Q702	NC	0.2/14.2	14.2/14.2	0/5	0	CD OFF/ON
Q862	NC	0/14.1	14.3	0/4.6	0	MUTE OFF/ON

[Measuring Conditions]

- Power Supply Voltage : DC14.4V
- Measuring Meter : Digital Multi Meter
- Measuring Point Reference : Between GND
- Measuring Condition : FM : 98.1MHz, MW : 999KHz, LW : 216KHz
  CD : at playing Disc

NOTE : ○ : For CDM-7874RB Model Only, ● : For CDM-7872RB Model Only, △ : For CDM-7871R Model Only, ▲ : For CDM-7871RM Model Only, □ : For CDE-7860R Model Only, Others : Common.

(CD Deck Mechanism)

IC201							
1	0	16	0		31	0 or 5	
2	0	17	5		32	0 or 5	
3	0	18	5		33	0	
4	0	19	5		34	0-5	repeat of H⇔L
5	0	20	0		35	0-5	repeat of H⇔L
6	5	21	5		36	0-5	repeat of H⇔L
7	0	22	0		37	0	
8	0	23	0 or 5		38	5	
9	0	24	0-5	repeat of H⇔L	39	0	
10	0	25	5		40	0-5	repeat of H⇔L
11	0	26	0-5	repeat of H⇔L	41	0-5	repeat of H⇔L
12	0	27	0-5	repeat of H⇔L	42	5	
13	0	28	0-5	repeat of H⇔L	43	5	
14	-	29	0		44	5	
15	-	30	0-5	repeat of H⇔L			

NOTE : - : indefinite voltage

IC301-1					
1	0		31	0-5	repeat of H⇔L
2	5		32	0-5	repeat of H⇔L
3	5		33	0-5	repeat of H⇔L
4	0-5	repeat of H⇔L	34	0-5	repeat of H⇔L
5	0-5	repeat of H⇔L	35	0-5	repeat of H⇔L
6	0-5	repeat of H⇔L	36	NC	
7	0-5	repeat of H⇔L	37	0	
8	0-5	repeat of H⇔L	38	NC	
9	0		39	0	
10	5		40	5	
11	5		41	NC	
12	-		42	NC	
13	0		43	NC	
14	2.5		44	NC	
15	0		45	0	
16	-		46	NC	
17	5		47	NC	
18	NC		48	0	
19	NC		49	0	
20	NC		50	NC	
21	NC		51	5	
22	5		52	NC	
23	-		53	NC	
24	-		54	0	
25	0		55	0	
26	5		56	0	
27	NC		57	0	
28	NC		58	0	
29	0-5	repeat of H⇔L	59	0	
30	0-5	repeat of H⇔L	60	NC	

NOTE : - : indefinite voltage

CDM-7874RB/CDM-7872RB/CDM-7871R/ CDM-7871RM/CDE-7860R

IC301-2				
61	0		81	0
62	2.5±2.5		82	about 2.8
63	2.5±2.5		83	NC
64	2.5±2.5		84	about 2.8
65	2.5±2.5		85	NC
66	NC		86	about 2.9
67	NC		87	about 2.9
68	NC		88	5
69	NC		89	2.5
70	5		90	about 2.5
71	0.5-4.5	repeat of H⇔L	91	about 2.5
72	2.5		92	about 2.5
73	3		93	about 2.5
74	RF signal		94	about 2.5
75	RF signal		95	about 2.5
76	RF signal		96	0
77	RF signal		97	0.17
78	NC		98	-
79	RF signal		99	0
80	2.5		100	5

NOTE : - : indefinite voltage

IC302	
1	7
2	7 or 5
3	0
4	1.4
5	5

Q301	
B	3.9
C	2.4
E	4.5

Q401		
E	0	
B	0-5	repeat of H⇔L
C	0-2.5	repeat of H⇔L

IC401					
1	0	11	-	21	5
2	2.5	12	-	22	about 2.5
3	about 2.5	13	-	23	about 2.5
4	about 2.5	14	-	24	2.5
5	2.5	15	-	25	about 2.5
6	about 2.5	16	-	26	about 2.5
7	about 2.5	17	-	27	2.5
8	7	18	-	28	0
9	0	19	0		
10	0	20	2.5		

NOTE : - : indefinite voltage

[Measuring Conditions]

- Power Supply Voltage : DC14.4V
- Measuring Meter : Digital Multi Voltmeter
- Measuring Point Reference : Between GND
- Measuring Condition : at playing disc

Description of IC Terminal

D784216AGF : IC601

No.	Symbol	I/O	Terminal Description
1	○ ENCODER 1	I	Encoder data input terminal.
	●△▲□ NC(PULL-UP)	-	Pull-up connect terminal.
2	○ ENCODER 2	I	Encoder data input terminal.
	●△▲□ NC(PULL-UP)	-	Pull-up connect terminal.
3	$\overline{\text{LCD RST}}$	O	RESET signal output terminal to LCD Driver (LC75883).
4	LCD DI	O	Serial data signal output terminal to LCD Driver (LC75883).
5	LCD CE	O	Chip enable signal output terminal to LCD Driver (LC75883).
6	LCD CLK	O	Serial clock signal output terminal to LCD Driver (LC75883).
7	LCD DO	I	Serial data signal input terminal from LCD Driver (LC75883).
8	NC	-	No connect terminal.
9	VDD	-	Power supply terminal.
10	POWER-IC ON	O	STBY CONT signal output terminal of Power IC.
11	NOSE POWER	O	Power supply control signal output terminal of LCD Driver/Remote Control.
12	LCD ON(NC)	-	No connect terminal.
13	PWR CONT	O	Power supply control signal output terminal of Audio/Key lighting.
14	DIMMER	I	DIMMER input terminal. (L : DIMMER-ON)
15 ~ 17	NC	-	No connect terminal.
18	V-CONT	O	Power supply control signal output terminal of Servo/Mechanism.
19	○●△▲ REMOCON	I	Remote Control data input terminal.
	□ NC	-	No connect terminal.
20 ~ 21	NC	-	No connect terminal.
22	Vpp	-	GND connect terminal.
23	7511 EEP SCL	O	Serial clock signal output terminal to 7511/EEP (M24C01).
24	7511 EEP SDA	I/O	Serial data signal input/output terminal to 7511/EEP (M24C01).
25	RDS SCL	O	RDS clock output terminal from RDS Decoder (SAA6588T).
26	RDS SDA	I/O	RDS data input/output terminal from RDS Decoder (SAA6588T).
27	E.VOL SCL	O	Serial clock signal output terminal to E.VOL (TDA7402).
28	E.VOL SDA	I/O	Serial data signal input/output terminal to E.VOL (TDA7402).
29	$\overline{\text{AUTO ADJ}}$	I	Auto adjustment control signal input terminal. (L : auto adjustment)
30	NC	-	No connect terminal.
31	LCD SEL	I	Black Mask/TN negative LCD set up input terminal.
32	$\overline{\text{CD STBY}}$	O	Stand-by control signal output terminal of Mechanism u-COM.
33	0 MUTE-DET	I	0-bit MUTE signal input terminal.
34	$\overline{\text{CD RST}}$	O	RESET signal output terminal of Mechanism u-COM.
35	$\overline{\text{CD CS}}$	O	Communication control signal output terminal of Mechanism u-COM.
36	V-Link SEL	I	V-Link set up input terminal.
37	VDD	-	Power supply terminal.
38	X2	-	Main system clock OSC connect terminal. (12.288MHz)
39	X1		
40	GND	-	GND connect terminal.

NOTE : ○ : For CDM-7874RB Model Only, ● : For CDM-7872RB Model Only,
△ : For CDM-7871R Model Only, ▲ : For CDM-7871RM Model Only,
□ : For CDE-7860R Model Only, Others : Common.

No.	Symbol	I/O	Terminal Description
41	XT2(NC)	-	No connect terminal.
42	XT1(GND)	-	GND connect terminal.
43	$\overline{\text{RESET}}$	I	SYSTEM RESET signal input terminal.
44	BATT DET	I	BATT detect signal input terminal. (deal with compulsion stand-by.)
45	ACC DET	I	ACC (IGNITION) detect signal input terminal.
46	NC	-	No connect terminal.
47	BUS IN	I	Signal input terminal from CD CHANGER BUS I/F.
48	BUS OUT	O	Signal output terminal to CD CHANGER BUS I/F.
49	DISC IN SW	I	DISC insert detect SW input terminal.
50	$\overline{\text{CD SRQ}}$	I	Communication request signal input terminal from Mechanism u-COM.
51	AVDD	-	Analog power supply terminal of A/D Converter.
52	AV REFO	-	Standard voltage input terminal of A/D Converter.
53	HI-TEMP	I	Temperature sensor signal (Thermistor) input terminal for CD.
54	NOSE ON	I	Front Panel detect signal input terminal.
55	S-METER	I	Signal Meter input terminal.
56	MULTIPATH	I	Multipath rejection detect terminal of receiving station.
57	ADJCH	I	Adjoining channel signal input terminal.
58	AFC	I	AFC signal input terminal.
59	GAIN SEL	I	Sub-W output GAIN set up input terminal.
60	1PRE/3PRE SEL	I	1Pre/3Pre set up input terminal.
61	AVSS	-	GND connect terminal of A/D Converter.
62 63	NC	-	No connect terminal.
64	AV REF1	-	Standard voltage input terminal of A/D Converter.
65	RDS MONI RxD(PULL-UP)	-	Pull-up connect terminal.
66	RDS MONI TxD(NC)	-	No connect terminal.
67	NC		
68	CD STS	I	Status signal input terminal from Mechanism u-COM.
	(RXD1)	-	(Flash Pro-II connect terminal by UART form.)
69	CD CMD	O	Command output terminal to Mechanism u-COM.
	(TXD1)	-	(Flash Pro-II connect terminal by UART form.)
70	CD SCK	O	Serial clock output terminal to Mechanism u-COM.
	(ASCK1)	-	(Flash Pro-II connect terminal by UART form.)
71 ~ 75	NC	-	No connect terminal.
76	AM SD	I	AM SD signal input terminal.
77	SSTOP	I	FM Seek Stop signal input terminal of TUNER (TDA7511).
78	NC	-	No connect terminal.
79	FM/AM	O	FM/AM power supply swutching signal output terminal. (H : FM)
80	DAVN	I	Avilable input terminal of RDS Decoder (SAA6588T).
81	ADJCH MUTE	O	MPX MUTE signal output terminal to RDS Decoder (SAA6588T) at FM Adjoining Rejection.
82	IF MUTE	O	High speed MUTE signal output terminal at AF SW.
83	ENCODER SEL	I	Encoder set up input terminal.
84	IN-INT	I	Outer Audio signal input terminal.
85	OUT REM ON	O	Remote ON signal output terminal for outer AMP.

No.	Symbol	I/O	Terminal Description
86 ~ 98	NC	-	No connect terminal.
99	$\overline{\text{A-MUTE}}$	O	Audio MUTE signal output terminal. (L : MUTE ON)
100	GND	-	GND connect terminal.

D789026GB : IC201 (DP23S2A0)

No.	Symbol	I/O	Terminal Description
1	SW-D	I	SW-D input terminal for Mechanism control.
2	SW-C	I	SW-C input terminal for Mechanism control.
3	SW-B	I	SW-B input terminal for Mechanism control.
4	LODM-	O	Loading Motor control output terminal.
5	LODM+		
6	DR MUTE	O	Driver IC MUTE control output terminal.
7 ~ 12	NC(GND)	-	GND connect terminal.
13	VPP	-	Pull-down connect terminal.
14	X2	-	Crystal OSC connect terminal. (4.19MHz)
15	X1		
16	VSS0	-	GND connect terminal.
17	VDD0	-	VDD connect terminal.
18	/RESET	I	Host I/F RESET signal input terminal.
19	S-CONT	O	Servo power supply control output terminal.
20	NC(GND)	-	GND connect terminal.
21	SW-A	I	SW-A input terminal for Mechanism control.
22	NC(GND)	-	GND connect terminal.
23	L-ZERO	I	DSP L-ch 0 data signal input terminal.
24	/CS	I	Host I/F communication start/end signal input terminal.
25	/STBY	I	Host I/F STBY signal input terminal.
26	CMD	I	Host I/F command input terminal.
27	STS	O	Host I/F status output terminal.
28	SCK	I	Clock input terminal for Host I/F communication.
29	NC(GND)	-	GND connect terminal.
30	/SRQ	O	Host I/F status request signal output terminal.
31	R-ZERO	I	DSP R-ch 0 data signal input terminal.
32	ZMUTE	O	Host I/F 0 data signal output terminal.
33	/XTALEN	O	DSP crystal OSC control output terminal.
34	SI	O	DSP serial data output terminal.
35	SO	I	DSP serial data/status signal input terminal.
36	/SCK	O	Clock output terminal for DSP serial data.
37	NC(GND)	-	GND connect terminal.
38	VDD1	-	VDD connect terminal.
39	VSS1	-	GND connect terminal.
40	/STB	O	DSP data strobe signal output terminal.
41	A0	O	DSP command/parameter discrimination signal output terminal.
42	/RST	O	DSP RESET signal output terminal.
43	RFOK	I	DSP RFOK signal input terminal.
44	LIMIT SW	I	LIMIT-SW input terminal.

CDM-7874RB/CDM-7872RB/CDM-7871R /CDM-7871RM/CDE-7860R

Electrical Parts List

Capacitor : μF=microfarads,pF=picofarads

Abbreviations

RES.= Resistor	CAP.= Capacitor
C.F.= Carbon Film	ELY.= Electrolytic
M.F.= Metal Film	CER.= Ceramic
M.O.= Metal OxideFilm	MYL.= Mylar
M.P.= Metal Plate	TAN.= Tantalum
TR. = Transistor	POLY.= Polystyrol
TRANS.= Transformer	PP. = Polypropylene
CP. = Chip	PLT.= Polyethylene
	PF. = Polyester Film

	Symbol No.	Part No.	Description
	Main P.W.Board		
	IC's		
	IC001	51T25259Y01	BA00AST -IS
	IC002	51T93333F01	NJM2904M-TE3 -SE2
	IC004	51T15132Y02	SAA6588T -SE9
	IC201	51T35457Y02	TDA7402 -QT
○	IC203	51T15420Y01	BA4560F-E2 -SE2
●	IC203	51T15420Y01	BA4560F-E2 -SE2
○	IC204	51T15420Y01	BA4560F-E2 -SE2
○	IC301	51T55148Y01	TA8273H -ZS
●	IC301	51T45409Y01	TA8263BH -ZS
△	IC301	51T45409Y01	TA8263BH -ZS
▲	IC301	51T45409Y01	TA8263BH -ZS
□	IC301	51T45409Y01	TA8263BH -ZS
	IC601	51T55117Y01	IC,D784216AGF-521-QT
	IC651	51T95193W01	TDA3606AT -SE9
	IC701	51T15510W01	IC ,MC34063AML -SPD
	Transistors		
	Q001	48T63420F01	TR,2SA1037AK-146 -CP
	Q002	48T73888F13	TR ,CP FMC3-99
	Q003	48T73888F13	TR ,CP FMC3-99
	Q005	48T62967F09	TR,DTC114TKA-T146-CP
	Q201	48T62967F03	TR,DTC124EKA-T146-CP
○	Q261	48T62967F33	TR,DTC343TK-T146 -CP
●	Q261	48T62967F33	TR,DTC343TK-T146 -CP
○	Q262	48T62967F33	TR,DTC343TK-T146 -CP
●	Q262	48T62967F33	TR,DTC343TK-T146 -CP
	Q263	48T62967F33	TR,DTC343TK-T146 -CP
	Q264	48T62967F33	TR,DTC343TK-T146 -CP
	Q301	48T62967F03	TR,DTC124EKA-T146-CP
○	Q601	48T62966F03	TR,DTA124EKA-T146-CP
●	Q601	48T62966F03	TR,DTA124EKA-T146-CP
△	Q601	48T62966F03	TR,DTA124EKA-T146-CP
▲	Q601	48T62966F03	TR,DTA124EKA-T146-CP

	Symbol No.	Part No.	Description
○	Q602	48T73888F08	TR ,CP.FMG1-99
●	Q602	48T73888F08	TR ,CP.FMG1-99
△	Q602	48T73888F08	TR ,CP.FMG1-99
▲	Q602	48T73888F08	TR ,CP.FMG1-99
○	Q603	48T64222F02	TR ,UN2212 22-22 -TX
●	Q603	48T64222F02	TR ,UN2212 22-22 -TX
	Q604	48T73888F13	TR ,CP FMC3-99
	Q651	48T73888F12	TR ,CP.FMC2-99
	Q652	48T73888F12	TR ,CP.FMC2-99
	Q664	48T62966F01	TR,DTA143EKA-T146-CP
	Q701	48T15511W02	CP.2SB1261-TE2 -E5
	Q702	48T73888F12	TR ,CP.FMC2-99
	Q803	48T84366F04	TR,2SB1243-QR-TV2-RD
	Q804	48T62967F05	TR,DTC143XKA-T146-CP
	Q805	48T69176F02	TR ,2SC3421-Y
	Q807	48T93828F04	TR,2SD1994A-S-TA -RD
△	Q808	48T93828F04	TR,2SD1994A-S-TA -RD
▲	Q808	48T93828F04	TR,2SD1994A-S-TA -RD
□	Q808	48T93828F04	TR,2SD1994A-S-TA -RD
	Q810	48T84366F04	TR,2SB1243-QR-TV2-RD
	Q815	48T62967F01	TR,DTC143EKA-T146-CP
	Q862	48T73888F12	TR ,CP.FMC2-99
	Q863	48T62967F03	TR,DTC124EKA-T146-CP
	Diodes		
	D001	48T94335F01	DIO,MA153-CP
○	D301	48T85270W01	DIO,MPG06G -A5
●	D301	48T02162K01	DIO,SHT SRT14 -A5
△	D301	48T02162K01	DIO,SHT SRT14 -A5
▲	D301	48T02162K01	DIO,SHT SRT14 -A5
□	D301	48T02162K01	DIO,SHT SRT14 -A5
○	D302	48T85270W01	DIO,MPG06G -A5
●	D302	48T02162K01	DIO,SHT SRT14 -A5
△	D302	48T02162K01	DIO,SHT SRT14 -A5
▲	D302	48T02162K01	DIO,SHT SRT14 -A5
□	D302	48T02162K01	DIO,SHT SRT14 -A5
○	D303	48T85270W01	DIO,MPG06G -A5
●	D303	48T02162K01	DIO,SHT SRT14 -A5
△	D303	48T02162K01	DIO,SHT SRT14 -A5
▲	D303	48T02162K01	DIO,SHT SRT14 -A5
□	D303	48T02162K01	DIO,SHT SRT14 -A5
○	D304	48T85270W01	DIO,MPG06G -A5
●	D304	48T02162K01	DIO,SHT SRT14 -A5
△	D304	48T02162K01	DIO,SHT SRT14 -A5
▲	D304	48T02162K01	DIO,SHT SRT14 -A5

NOTE : ○ : For CDM-7874RB Model Only, ● : For CDM-7872RB Model Only, △ : For CDM-7871R Model Only, ▲ : For CDM-7871RM Model Only, □ : For CDE-7860R Model Only, Others : Common.

Symbol No.	Part No.	Description
□ D304	48T02162K01	DIO, SHT SRT14 -A5
○ D305	48T85270W01	DIO, MPG06G -A5
● D305	48T02162K01	DIO, SHT SRT14 -A5
△ D305	48T02162K01	DIO, SHT SRT14 -A5
▲ D305	48T02162K01	DIO, SHT SRT14 -A5
□ D305	48T02162K01	DIO, SHT SRT14 -A5
○ D306	48T85270W01	DIO, MPG06G -A5
● D306	48T02162K01	DIO, SHT SRT14 -A5
△ D306	48T02162K01	DIO, SHT SRT14 -A5
▲ D306	48T02162K01	DIO, SHT SRT14 -A5
□ D306	48T02162K01	DIO, SHT SRT14 -A5
○ D307	48T85270W01	DIO, MPG06G -A5
● D307	48T02162K01	DIO, SHT SRT14 -A5
△ D307	48T02162K01	DIO, SHT SRT14 -A5
▲ D307	48T02162K01	DIO, SHT SRT14 -A5
□ D307	48T02162K01	DIO, SHT SRT14 -A5
○ D308	48T85270W01	DIO, MPG06G -A5
● D308	48T02162K01	DIO, SHT SRT14 -A5
△ D308	48T02162K01	DIO, SHT SRT14 -A5
▲ D308	48T02162K01	DIO, SHT SRT14 -A5
□ D308	48T02162K01	DIO, SHT SRT14 -A5
○ D601	48T68828F01	DIO, 1SS133 -A5
● D601	48T68828F01	DIO, 1SS133 -A5
△ D601	48T68828F01	DIO, 1SS133 -A5
▲ D601	48T68828F01	DIO, 1SS133 -A5
D653	48T68828F01	DIO, 1SS133 -A5
D662	48T63462F01	DIO, CP. DAN202K -96
D804	48T85270W01	DIO, MPG06G -A5
D861	48T68828F01	DIO, 1SS133 -A5
D862	48T75404W01	DIO, 1SS353-TE17 -CP
SD701	48T85269W01	DIO, SHT SB040 -A5
SD801	48T68580F03	DIO, SI DSA3A4-F5
ZD652	48T83128F14	DIO, ZEN HZS 7B2L -A5
ZD802	48T83128F25	DIO, ZEN. HZS 9C1L -A5
ZD803	48T83128F26	DIO, ZEN. HZS 9C2L -A5
Filters		
CF001	91T75257W02	LPF, LPF11830KH-3C-DB
Z004	91T65112W06	EMI, BK2125HM102 -CP
Z005	91T65112W06	EMI, BK2125HM102 -CP
Z006	91T65112W06	EMI, BK2125HM102 -CP
Z007	91T65112W06	EMI, BK2125HM102 -CP
Z201	24T35072W03	FBI, BL02RN1R2P1A -R5
Z601	91T65112W06	EMI, BK2125HM102 -CP

Symbol No.	Part No.	Description
Coils		
L001	24T25164Y21	IND, FSLM2520 4R7J-CP
L002	24T16403W29	COI, IND. 15R-M -CP
L003	24T25164Y21	IND, FSLM2520 4R7J-CP
L651	24T16403W23	COI, IND. 4R7-M -CP
L701	24T16271W13	COIL, RCR875D-221K
VT001	24T35286Y01	IND, MG56 523J -DB
Crystals		
XL001	91T25806W18	XTL, 4.332M -AT51-TP
XL601	91T55360Y03	XTL, AT-51 12.288M-R5
Poly Switch		
PS801	48T95226W01	TMT, PTGL05BA1R8M1-R5
Surge Protector		
SA001	48T81909F01	PTT, DSP-201M -A1
Switch		
SW601	40T16096W03	SW , TACT SKHHLW(RESET)
Thermistor		
TH601	48T93439F06	TMT, 104 -R2
Capacitors		
C001	08S45676W89	CAP, CER 473K-B1E -CP
C002	08S45677W60	CAP, CER 102J-CH1H-CP
C003	08S45676W73	CAP, CER. 103K-B1H -CP
C004	08S45676W73	CAP, CER. 103K-B1H -CP
C005	08S45676W73	CAP, CER. 103K-B1H -CP
C006	08S45676W73	CAP, CER. 103K-B1H -CP
C007	08S45676W73	CAP, CER. 103K-B1H -CP
C009	08S45676W85	CAP, CER 104K-B1C -CP
C010	08S45677W48	CAP, CER. 331J-CH1H-CP
C012	08S45677W36	CAP, CER. 101J-CH1H-CP
C014	08S45676W80	CAP, CER 223K-B1E -CP

NOTE : ○ : For CDM-7874RB Model Only, ● : For CDM-7872RB Model Only, △ : For CDM-7871R Model Only,
▲ : For CDM-7871RM Model Only, □ : For CDE-7860R Model Only, Others : Common.

CDM-7874RB/CDM-7872RB/CDM-7871R /CDM-7871RM/CDE-7860R

Symbol No.	Part No.	Description
C015	08S45677W36	CAP, CER. 101J-CH1H-CP
C016	08S45677W60	CAP, CER 102J-CH1H-CP
C018	08S45676W80	CAP, CER 223K-B1E -CP
C021	08S45676W65	CAP, CER. 222K-B1H -CP
C022	08S45676W85	CAP, CER 104K-B1C -CP
C023	08S45676W85	CAP, CER 104K-B1C -CP
C024	08S45676W80	CAP, CER 223K-B1E -CP
C025	08S45677W42	CAP, CER. 181J-CH1H-CP
C026	08S45676W85	CAP, CER 104K-B1C -CP
C027	08S45677W22	CAP, CER. 27RJ-CH1H-CP
C028	08S45677W22	CAP, CER. 27RJ-CH1H-CP
C029	08S45677W36	CAP, CER. 101J-CH1H-CP
C030	08S45677W36	CAP, CER. 101J-CH1H-CP
C031	08S45676W85	CAP, CER 104K-B1C -CP
C032	08S45677W54	CAP, CER 561J-CH1H-CP
C035	08S45676W80	CAP, CER 223K-B1E -CP
C108	08S45676W67	CAP, CER. 332K-B1H -CP
C109	08S45676W67	CAP, CER. 332K-B1H -CP
C200	08S60102F48	CAP, CER 105K-B1E -CP
C204	08S45676W74	CAP, CER 123K-B1H -CP
C205	08S45677W60	CAP, CER 102J-CH1H-CP
C206	08S45676W85	CAP, CER 104K-B1C -CP
C207	08S45676W85	CAP, CER 104K-B1C -CP
C208	08S45677W36	CAP, CER. 101J-CH1H-CP
C209	08S45676W84	CAP, CER 683K-B1C -CP
○ C211	08S45677W60	CAP, CER 102J-CH1H-CP
● C211	08S45677W60	CAP, CER 102J-CH1H-CP
○ C212	08S45677W60	CAP, CER 102J-CH1H-CP
● C212	08S45677W60	CAP, CER 102J-CH1H-CP
C213	08S45677W60	CAP, CER 102J-CH1H-CP
C214	08S45677W60	CAP, CER 102J-CH1H-CP
C303	08S45676W93	CAP, CER 224K-B1A -CP
C311	08T35122W17	CAP, MMTS-224-J -R5
C312	08T35122W17	CAP, MMTS-224-J -R5
C313	08T35122W17	CAP, MMTS-224-J -R5
C314	08T35122W17	CAP, MMTS-224-J -R5
C501	08S45677W60	CAP, CER 102J-CH1H-CP
C602	08S53332F51	CAP, CP .223-K-B -CP
C608	08S45677W18	CAP, CER. 18RJ-CH1H-CP
C609	08S45677W18	CAP, CER. 18RJ-CH1H-CP
○ C610	08S45677W48	CAP, CER. 331J-CH1H-CP
● C610	08S45677W48	CAP, CER. 331J-CH1H-CP
△ C610	08S45677W48	CAP, CER. 331J-CH1H-CP
▲ C610	08S45677W48	CAP, CER. 331J-CH1H-CP
C611	08S45676W80	CAP, CER 223K-B1E -CP
C628	08S45676W85	CAP, CER 104K-B1C -CP
C651	08S45676W80	CAP, CER 223K-B1E -CP
C652	08S45676W80	CAP, CER 223K-B1E -CP
C653	08S45676W85	CAP, CER 104K-B1C -CP

Symbol No.	Part No.	Description
C662	08S45677W60	CAP, CER 102J-CH1H-CP
C701	08S60102F48	CAP, CER 105K-B1E -CP
C702	08S45677W38	CAP, CER 121J-CH1H-CP
C705	08S45676W80	CAP, CER 223K-B1E -CP
C706	08S45676W63	CAP, CER 152K-B1H -CP
C707	08S45676W80	CAP, CER 223K-B1E -CP
C800	08S45677W60	CAP, CER 102J-CH1H-CP
C801	08S45676W89	CAP, CER 473K-B1E -CP
C802	08T35122W13	CAP, MMTS-104-J -R5
C808	08S45676W80	CAP, CER 223K-B1E -CP
C810	08S45539Y04	CAP, CER 103KX7R2J-CP
C811	08S45539Y04	CAP, CER 103KX7R2J-CP
C813	08S45539Y04	CAP, CER 103KX7R2J-CP
E001	23T15765Y88	CAP, TAN 10R-1E-E -E1
E002	23S75372W03	CAP, ELY 221-1A -H2
E003	23S75373W03	CAP, ELY 22R-1C -R2
E004	23S75373W03	CAP, ELY 22R-1C -R2
E005	23S95415W07	CAP, ELY 221-1C -R2
E007	23S75373W14	CAP, ELY 2R2-1H -R2
E009	23S75372W05	CAP, ELY 22R-1C -R2
E012	23S75373W03	CAP, ELY 22R-1C -R2
E202	23S75373W02	CAP, ELY 10R-1C -R2
E205	23S75373W13	CAP, ELY 1R0-1H -R2
E206	23S75373W13	CAP, ELY 1R0-1H -R2
E207	23S75373W13	CAP, ELY 1R0-1H -R2
E208	23S75373W03	CAP, ELY 22R-1C -R2
E209	23S75373W13	CAP, ELY 1R0-1H -R2
E210	23S75373W13	CAP, ELY 1R0-1H -R2
E211	23S75373W13	CAP, ELY 1R0-1H -R2
E212	23S75373W13	CAP, ELY 1R0-1H -R2
E213	23S75373W02	CAP, ELY 10R-1C -R2
○ E241	23S75373W03	CAP, ELY 22R-1C -R2
● E241	23S75373W03	CAP, ELY 22R-1C -R2
○ E242	23S75373W03	CAP, ELY 22R-1C -R2
○ E261	23S75372W16	CAP, ELY 2R2-1H -R2
● E261	23S75372W16	CAP, ELY 2R2-1H -R2
○ E262	23S75372W16	CAP, ELY 2R2-1H -R2
● E262	23S75372W16	CAP, ELY 2R2-1H -R2
E263	23S75372W16	CAP, ELY 2R2-1H -R2
E264	23S75372W16	CAP, ELY 2R2-1H -R2
E301	23S95415W13	CAP, ELY R10-1H -R2
E302	23S95415W14	CAP, ELY R22-1H -R2
E303	23S95415W03	CAP, ELY 10R-1C -R2
E304	23S95415W17	CAP, ELY 1R0-1H -R2
E311	23S95415W17	CAP, ELY 1R0-1H -R2
E312	23S95415W17	CAP, ELY 1R0-1H -R2
E313	23S95415W17	CAP, ELY 1R0-1H -R2
E314	23S95415W17	CAP, ELY 1R0-1H -R2
E601	23S75372W05	CAP, ELY 22R-1C -R2

NOTE : ○ : For CDM-7874RB Model Only, ● : For CDM-7872RB Model Only, △ : For CDM-7871R Model Only, ▲ : For CDM-7871RM Model Only, Others : Common.

	Symbol No.	Part No.	Description
	E602	23S75372W03	CAP, ELY 221-1A -H2
○	E604	23S75373W02	CAP, ELY 10R-1C -R2
●	E604	23S75373W02	CAP, ELY 10R-1C -R2
	E650	23S75373W15	CAP, ELY 3R3-1H -R2
	E651	23S75373W04	CAP, ELY 33R-1C -R2
	E654	23S75373W08	CAP, ELY R10-1H -R2
	E701	23T55378W03	CAP, KMG 471-1A -R2
	E702	23S75373W06	CAP, ELY 101-1C -R2
	E800	23S75372W08	CAP, ELY 101-1C -H2
	E801	23T75346W03	CAP, X-PRO 332-1C +
	E803	23S75372W02	CAP, ELY 101-1A -R2
	E804	23S75373W04	CAP, ELY 33R-1C -R2
	E805	23S75372W15	CAP, ELY 1R0-1H -R2
	E842	23S75373W06	CAP, ELY 101-1C -R2
	E861	23S75372W07	CAP, ELY 47R-1C -R2
	Resistors		
	J003	06S35095Y08	RES, RK JUMPER 1/4-CP
	J005	06S35095Y08	RES, RK JUMPER 1/4-CP
	J023	06S45675W43	RES, RK JUMPER1/10-CP
	J024	06S35095Y08	RES, RK JUMPER 1/4-CP
	J036	06S35095Y08	RES, RK JUMPER 1/4-CP
	J038	06S35095Y08	RES, RK JUMPER 1/4-CP
	J039	06S35095Y08	RES, RK JUMPER 1/4-CP
	J040	06S45675W43	RES, RK JUMPER1/10-CP
	J041	06S35095Y08	RES, RK JUMPER 1/4-CP
	J044	06S35095Y08	RES, RK JUMPER 1/4-CP
	J054	06S35095Y08	RES, RK JUMPER 1/4-CP
	J073	06S35095Y08	RES, RK JUMPER 1/4-CP
	J080	06S35095Y08	RES, RK JUMPER 1/4-CP
	J081	06S35095Y08	RES, RK JUMPER 1/4-CP
	J084	06S35095Y08	RES, RK JUMPER 1/4-CP
	J085	06S35095Y08	RES, RK JUMPER 1/4-CP
	J120	06S35095Y08	RES, RK JUMPER 1/4-CP
	J124	06S35095Y08	RES, RK JUMPER 1/4-CP
	J126	06S35095Y08	RES, RK JUMPER 1/4-CP
	J136	06S35095Y08	RES, RK JUMPER 1/4-CP
	J140	06S35095Y08	RES, RK JUMPER 1/4-CP
	J142	06S35095Y08	RES, RK JUMPER 1/4-CP
	J143	06S35095Y08	RES, RK JUMPER 1/4-CP
	J145	06S45675W43	RES, RK JUMPER1/10-CP
	J149	06S35095Y08	RES, RK JUMPER 1/4-CP
	J150	06S35095Y08	RES, RK JUMPER 1/4-CP
	J166	06S35095Y08	RES, RK JUMPER 1/4-CP
	J170	06S35095Y08	RES, RK JUMPER 1/4-CP
	J174	06S35095Y08	RES, RK JUMPER 1/4-CP
	J185	06S35095Y08	RES, RK JUMPER 1/4-CP

	Symbol No.	Part No.	Description
	J188	06S35095Y08	RES, RK JUMPER 1/4-CP
	J194	06S35095Y08	RES, RK JUMPER 1/4-CP
	J196	06S64996F39	RES, RK JUMPER 1/8-CP
	J199	06S35095Y08	RES, RK JUMPER 1/4-CP
	J200	06S35095Y08	RES, RK JUMPER 1/4-CP
	R001	06S70072F05	RES, CP .10R-J-1/4-CP
	R002	06S45674W57	RES, RK 102J 1/10 -CP
	R003	06S45674W57	RES, RK 102J 1/10 -CP
	R004	06S45674W89	RES, RK 223J 1/10 -CP
	R005	06S45674W89	RES, RK 223J 1/10 -CP
	R006	06S45675W43	RES, RK JUMPER1/10-CP
	R007	06S45675W43	RES, RK JUMPER1/10-CP
	R008	06S45675W43	RES, RK JUMPER1/10-CP
	R009	06S45674W69	RES, RK 332J 1/10 -CP
	R010	06S45674W57	RES, RK 102J 1/10 -CP
	R012	06S45674W57	RES, RK 102J 1/10 -CP
	R013	06S45675W43	RES, RK JUMPER1/10-CP
	R014	06S45674W09	RES, RK 10RJ 1/10 -CP
	R016	06S45674W49	RES, RK 471J 1/10 -CP
	R017	06S45674W57	RES, RK 102J 1/10 -CP
	R018	06S45674W57	RES, RK 102J 1/10 -CP
	R019	06S45674W49	RES, RK 471J 1/10 -CP
	R021	06S35095Y08	RES, RK JUMPER 1/4-CP
	R022	06S45674W93	RES, RK 333J 1/10 -CP
	R023	06S15593Y76	RES, RK 133F 1/10 -CP
	R024	06S15593Y57	RES, RK 222F 1/10 -CP
	R026	06S45674W57	RES, RK 102J 1/10 -CP
	R027	06S45674W89	RES, RK 223J 1/10 -CP
	R037	06S45674W09	RES, RK 10RJ 1/10 -CP
	R038	06S45675W43	RES, RK JUMPER1/10-CP
	R039	06S45675W22	RES, RK 474J 1/10 -CP
	R041	06S45674W73	RES, RK 472J 1/10 -CP
	R044	06S45674W57	RES, RK 102J 1/10 -CP
	R045	06S45674W57	RES, RK 102J 1/10 -CP
	R047	06S45674W75	RES, RK 562J 1/10 -CP
	R048	06S45674W75	RES, RK 562J 1/10 -CP
	R101	06S70072F50	RES, CP .751-J-1/4-CP
	R102	06S70072F50	RES, CP .751-J-1/4-CP
	R200	06S45674W90	RES, RK 243J 1/10 -CP
	R201	06S45674W77	RES, RK 682J 1/10 -CP
	R202	06S45674W95	RES, RK 393J 1/10 -CP
	R203	06S45674W65	RES, RK 222J 1/10 -CP
	R205	06S45675W22	RES, RK 474J 1/10 -CP
	R206	06S45674W57	RES, RK 102J 1/10 -CP
	R207	06S45674W57	RES, RK 102J 1/10 -CP
○	R241	06S45674W58	RES, RK 112J 1/10 -CP
●	R241	06S45674W58	RES, RK 112J 1/10 -CP
○	R242	06S45674W58	RES, RK 112J 1/10 -CP
●	R242	06S45674W58	RES, RK 112J 1/10 -CP

NOTE : ○ : For CDM-7874RB Model Only, ● : For CDM-7872RB Model Only, Others : Common.

CDM-7874RB/CDM-7872RB/CDM-7871R /CDM-7871RM/CDE-7860R

Symbol No.	Part No.	Description
○ R243	06S45674W58	RES, RK 112J 1/10 -CP
○ R244	06S45674W58	RES, RK 112J 1/10 -CP
○ R261	06S45674W40	RES, RK 201J 1/10 -CP
● R261	06S45674W40	RES, RK 201J 1/10 -CP
○ R262	06S45674W40	RES, RK 201J 1/10 -CP
● R262	06S45674W40	RES, RK 201J 1/10 -CP
○ R263	06S45674W96	RES, RK 433J 1/10 -CP
● R263	06S45674W96	RES, RK 433J 1/10 -CP
○ R264	06S45674W96	RES, RK 433J 1/10 -CP
● R264	06S45674W96	RES, RK 433J 1/10 -CP
○ R265	06S45674W33	RES, RK 101J 1/10 -CP
● R265	06S45674W33	RES, RK 101J 1/10 -CP
○ R266	06S45674W33	RES, RK 101J 1/10 -CP
● R266	06S45674W33	RES, RK 101J 1/10 -CP
R267	06S45674W40	RES, RK 201J 1/10 -CP
R268	06S45674W40	RES, RK 201J 1/10 -CP
R269	06S45674W33	RES, RK 101J 1/10 -CP
R270	06S45674W96	RES, RK 433J 1/10 -CP
R271	06S45674W96	RES, RK 433J 1/10 -CP
R272	06S45674W33	RES, RK 101J 1/10 -CP
R301	06S45674W41	RES, RK 221J 1/10 -CP
R302	06S45674W41	RES, RK 221J 1/10 -CP
R303	06S45674W41	RES, RK 221J 1/10 -CP
R304	06S45674W41	RES, RK 221J 1/10 -CP
R305	06S70072F77	RES, CP .103-J-1/4-CP
R308	06S45675W43	RES, RK JUMPER1/10-CP
△ R311	06S45675W43	RES, RK JUMPER1/10-CP
▲ R311	06S45675W43	RES, RK JUMPER1/10-CP
□ R311	06S45675W43	RES, RK JUMPER1/10-CP
△ R312	06S45675W43	RES, RK JUMPER1/10-CP
▲ R312	06S45675W43	RES, RK JUMPER1/10-CP
□ R312	06S45675W43	RES, RK JUMPER1/10-CP
● R313	06S45675W43	RES, RK JUMPER1/10-CP
△ R313	06S45675W43	RES, RK JUMPER1/10-CP
▲ R313	06S45675W43	RES, RK JUMPER1/10-CP
□ R313	06S45675W43	RES, RK JUMPER1/10-CP
● R314	06S45675W43	RES, RK JUMPER1/10-CP
△ R314	06S45675W43	RES, RK JUMPER1/10-CP
▲ R314	06S45675W43	RES, RK JUMPER1/10-CP
□ R314	06S45675W43	RES, RK JUMPER1/10-CP
● R315	06S35095Y08	RES, RK JUMPER 1/4-CP
△ R315	06S35095Y08	RES, RK JUMPER 1/4-CP
▲ R315	06S35095Y08	RES, RK JUMPER 1/4-CP
□ R315	06S35095Y08	RES, RK JUMPER 1/4-CP
● R316	06S35095Y08	RES, RK JUMPER 1/4-CP
△ R316	06S35095Y08	RES, RK JUMPER 1/4-CP
▲ R316	06S35095Y08	RES, RK JUMPER 1/4-CP
□ R316	06S35095Y08	RES, RK JUMPER 1/4-CP
○ R317	06S45675W43	RES, RK JUMPER1/10-CP
○ R318	06S45675W43	RES, RK JUMPER1/10-CP

Symbol No.	Part No.	Description
R399	06S45674W81	RES, RK 103J 1/10 -CP
R600	06S45674W97	RES, RK 473J 1/10 -CP
R604	06S45674W89	RES, RK 223J 1/10 -CP
R605	06S45674W97	RES, RK 473J 1/10 -CP
R606	06S45674W57	RES, RK 102J 1/10 -CP
R607	06S45674W81	RES, RK 103J 1/10 -CP
R608	06S64995F77	RES, RK 103J 1/8 -CP
R609	06T45541Y01	RES, RS 12RJ 2W -
R611	06S70072F69	RES, CP .472-J-1/4-CP
R612	06S45674W83	RES, RK 123J 1/10 -CP
R613	06S45674W57	RES, RK 102J 1/10 -CP
R614	06S64995F53	RES, RK 102J 1/8 -CP
R615	06S64995F53	RES, RK 102J 1/8 -CP
R616	06S64995F53	RES, RK 102J 1/8 -CP
R617	06S45674W57	RES, RK 102J 1/10 -CP
R618	06S45675W43	RES, RK JUMPER1/10-CP
R619	06S45674W57	RES, RK 102J 1/10 -CP
R620	06S45674W57	RES, RK 102J 1/10 -CP
● R621	06S70072F95	RES, RK 123J 1/4 -CP
△ R621	06S70072F95	RES, RK 123J 1/4 -CP
▲ R621	06S70072F95	RES, RK 123J 1/4 -CP
□ R621	06S70072F95	RES, RK 123J 1/4 -CP
○ R622	06S45674W89	RES, RK 223J 1/10 -CP
R623	06S45674W57	RES, RK 102J 1/10 -CP
R624	06S45674W57	RES, RK 102J 1/10 -CP
R625	06S45674W89	RES, RK 223J 1/10 -CP
R626	06S45674W89	RES, RK 223J 1/10 -CP
R629	06S45674W97	RES, RK 473J 1/10 -CP
○ R630	06S45674W89	RES, RK 223J 1/10 -CP
● R630	06S45674W89	RES, RK 223J 1/10 -CP
△ R630	06S45674W89	RES, RK 223J 1/10 -CP
▲ R630	06S45674W89	RES, RK 223J 1/10 -CP
○ R631	06S70072F98	RES, RK 223J 1/4 -CP
● R631	06S70072F98	RES, RK 223J 1/4 -CP
△ R631	06S70072F98	RES, RK 223J 1/4 -CP
▲ R631	06S70072F98	RES, RK 223J 1/4 -CP
○ R632	06S01883K17	RES, RD 221J 1/4 -A5
● R632	06S01883K17	RES, RD 221J 1/4 -A5
△ R632	06S01883K17	RES, RD 221J 1/4 -A5
▲ R632	06S01883K17	RES, RD 221J 1/4 -A5
R634	06S45674W43	RES, RK 271J 1/10 -CP
R635	06S45674W97	RES, RK 473J 1/10 -CP
R636	06S35095Y03	RES, RK 473J 1/4 -CP
● R638	06S45674W83	RES, RK 123J 1/10 -CP
△ R638	06S45674W83	RES, RK 123J 1/10 -CP
▲ R638	06S45674W83	RES, RK 123J 1/10 -CP
□ R638	06S45674W83	RES, RK 123J 1/10 -CP
● R639	06S45674W83	RES, RK 123J 1/10 -CP
△ R639	06S45674W83	RES, RK 123J 1/10 -CP
▲ R639	06S45674W83	RES, RK 123J 1/10 -CP

NOTE : ○ : For CDM-7874RB Model Only, ● : For CDM-7872RB Model Only, △ : For CDM-7871R Model Only,
▲ : For CDM-7871RM Model Only, □ : For CDE-7860R Model Only, Others : Common.

Symbol No.	Part No.	Description
□ R639	06S45674W83	RES, RK 123J 1/10 -CP
R640	06S45675W22	RES, RK 474J 1/10 -CP
R641	06S70072F98	RES, RK 223J 1/4 -CP
R642	06S45674W57	RES, RK 102J 1/10 -CP
○ R643	06S45674W89	RES, RK 223J 1/10 -CP
R644	06S45674W97	RES, RK 473J 1/10 -CP
R645	06S45674W43	RES, RK 271J 1/10 -CP
R646	06S45674W73	RES, RK 472J 1/10 -CP
R647	06S45674W73	RES, RK 472J 1/10 -CP
○ R648	06S45674W89	RES, RK 223J 1/10 -CP
R649	06S45674W89	RES, RK 223J 1/10 -CP
R650	06S45674W89	RES, RK 223J 1/10 -CP
R651	06S45674W99	RES, RK 563J 1/10 -CP
R652	06S45674W57	RES, RK 102J 1/10 -CP
R653	06S70072F63	RES, CP .272-J-1/4-CP
R654	06S70072F69	RES, CP .472-J-1/4-CP
R655	06S70072F69	RES, CP .472-J-1/4-CP
R656	06T75434W10	RES, RK 334J 1/4 -CP
R657	06S15593Y99	RES, RK 124F 1/10 -CP
R658	06S45675W06	RES, RK 104J 1/10 -CP
○ R659	06S70072F77	RES, CP .103-J-1/4-CP
● R659	06S70072F77	RES, CP .103-J-1/4-CP
○ R660	06S70072F77	RES, CP .103-J-1/4-CP
● R660	06S70072F77	RES, CP .103-J-1/4-CP
□ R661	06S70072F98	RES, RK 223J 1/4 -CP
○ R662	06S45674W83	RES, RK 123J 1/10 -CP
● R662	06S45674W83	RES, RK 123J 1/10 -CP
△ R662	06S45674W83	RES, RK 123J 1/10 -CP
▲ R662	06S45674W83	RES, RK 123J 1/10 -CP
○ R663	06S45674W89	RES, RK 223J 1/10 -CP
● R663	06S45674W89	RES, RK 223J 1/10 -CP
△ R663	06S45674W89	RES, RK 223J 1/10 -CP
▲ R663	06S45674W89	RES, RK 223J 1/10 -CP
○ R664	06S35095Y03	RES, RK 473J 1/4 -CP
● R664	06S35095Y03	RES, RK 473J 1/4 -CP
▲ R664	06S35095Y03	RES, RK 473J 1/4 -CP
□ R664	06S35095Y03	RES, RK 473J 1/4 -CP
□ R665	06S70072F95	RES, RK 123J 1/4 -CP
R666	06S45675W43	RES, RK JUMPER1/10-CP
R667	06S45675W43	RES, RK JUMPER1/10-CP
R668	06S45675W43	RES, RK JUMPER1/10-CP
○ R681	06S64995F53	RES, RK 102J 1/8 -CP
○ R682	06S64995F53	RES, RK 102J 1/8 -CP
R683	06S45674W57	RES, RK 102J 1/10 -CP
R684	06S45674W57	RES, RK 102J 1/10 -CP
R686	06S45674W65	RES, RK 222J 1/10 -CP
R701	06S70072F47	RES, CP .561-J-1/4-CP
R702	06S35084Y41	RES, RK 223F 1/8 -CP
R703	06S70072F29	RES, CP .101-J-1/4-CP

Symbol No.	Part No.	Description
R704	06S70072F47	RES, CP .561-J-1/4-CP
R705	06S35084Y33	RES, RK 472F 1/8 -CP
R707	06S45675W13	RES, RK 204J 1/10 -CP
R801	06S70072F53	RES, CP .102-J-1/4-CP
R802	06S70072F77	RES, CP .103-J-1/4-CP
○ R803	06S45675W06	RES, RK 104J 1/10 -CP
● R803	06S45675W06	RES, RK 104J 1/10 -CP
R804	06S35095Y15	RES, RK 243J 1/4 -CP
R805	06S70072F58	RES, CF .162-J-1/4-CP
R806	06S70072F58	RES, CF .162-J-1/4-CP
R807	06S70072F49	RES, CP .681-J-1/4-CP
○ R808	06S70072F51	RES, CP .821-J-1/4-CP
● R808	06S70072F51	RES, CP .821-J-1/4-CP
△ R808	06S70072F44	RES, CP .431-J-1/4-CP
▲ R808	06S70072F44	RES, CP .431-J-1/4-CP
□ R808	06S70072F44	RES, CP .431-J-1/4-CP
○ R809	06S35095Y08	RES, RK JUMPER 1/4-CP
● R809	06S35095Y08	RES, RK JUMPER 1/4-CP
△ R809	06S70072F78	RES, CP .2R2-J-1/4-CP
▲ R809	06S70072F78	RES, CP .2R2-J-1/4-CP
□ R809	06S70072F78	RES, CP .2R2-J-1/4-CP
△ R811	06S70072F78	RES, CP .2R2-J-1/4-CP
▲ R811	06S70072F78	RES, CP .2R2-J-1/4-CP
□ R811	06S70072F78	RES, CP .2R2-J-1/4-CP
R812	06S70072F57	RES, CP .152-J-1/4-CP
R813	06S70072F57	RES, CP .152-J-1/4-CP
R827	06S45674W90	RES, RK 243J 1/10 -CP
R828	06S70072F59	RES, CP .182-J-1/4-CP
R829	06S70072F59	RES, CP .182-J-1/4-CP
R833	06S70072F77	RES, CP .103-J-1/4-CP
R853	06S45674W81	RES, RK 103J 1/10 -CP
R864	06S45674W81	RES, RK 103J 1/10 -CP
R865	06S45675W16	RES, RK 274J 1/10 -CP
R867	06S70072F29	RES, CP .101-J-1/4-CP

Connectors

CH101	09T25684Y22	FFC, SLW22R-1C7 -DB
○ CH691	01T02237K01	ASSY, REMOCON WIRE74R
○ CH202	01T02238K01	ASSY, 4V PRE WIRE 74R

Front P.W.Board
<CDM-7874RB Model Only>

IC's

IC401	51T85152W01	LC75883 -QT

NOTE : ○ : For CDM-7874RB Model Only, ● : For CDM-7872RB Model Only, △ : For CDM-7871R Model Only,
▲ : For CDM-7871RM Model Only, □ : For CDE-7860R Model Only, Others : Common.

CDM-7874RB/CDM-7872RB/CDM-7871R /CDM-7871RM/CDE-7860R

Symbol No.	Part No.	Description
IC402	51T35614Y01	SBX3050-02 -NE5
Transistors		
Q401	48T63788F04	TR ,CP.2SD1328-T -TX
Q402	48T62967F02	TR,DTC114EKA-T146-CP
Diodes		
D401	48T81063F01	DIO,CP.MA159 / TX-CP
D402	48T81063F01	DIO,CP.MA159 / TX-CP
D403	48T85357W01	DIO,1PS226 -CP
D404	48T85357W01	DIO,1PS226 -CP
D405	48T85357W01	DIO,1PS226 -CP
D406	48T85357W01	DIO,1PS226 -CP
D407	48T85357W01	DIO,1PS226 -CP
D408	48T85357W01	DIO,1PS226 -CP
ZD401	48T15541Y23	DIO,ZEN MAZS180 -CP
ZD402	48T15541Y23	DIO,ZEN MAZS180 -CP
ZD403	48T62934F26	DIO,ZEN.RD6.2MB3 -CP
LED's		
LD401	48T45280Y01	LED,WHT NSCWS405T-E2
LD402	48T45280Y01	LED,WHT NSCWS405T-E2
LD403	48T45280Y01	LED,WHT NSCWS405T-E2
LD404	48T45280Y01	LED,WHT NSCWS405T-E2
LD405	48T25534Y01	LED,GRN BG1111C -CP
LD406	48T25534Y01	LED,GRN BG1111C -CP
LD407	48T25534Y01	LED,GRN BG1111C -CP
LD408	48T25534Y01	LED,GRN BG1111C -CP
LD409	48T25534Y01	LED,GRN BG1111C -CP
LD410	48T25534Y01	LED,GRN BG1111C -CP
LD411	48T25534Y10	LED,YEL FY1111C -CP
LD412	48T25534Y10	LED,YEL FY1111C -CP
LD413	48T25534Y01	LED,GRN BG1111C -CP
LD414	48T25534Y01	LED,GRN BG1111C -CP
LD415	48T25534Y09	LED,BLU DB1111C10-CP
LD416	48T25534Y02	LED,RED BR1111C -CP
LD417	48T25534Y09	LED,BLU DB1111C10-CP
LD418	48T25534Y09	LED,BLU DB1111C10-CP
LD419	48T25534Y09	LED,BLU DB1111C10-CP

Symbol No.	Part No.	Description
Switches		
SW401	40T55656W06	SW,TACT SKQMAJ001-E2(MUTE)
SW402	40T55656W06	SW,TACT SKQMAJ001-E2(F/SETUP)
SW403	40T55656W06	SW,TACT SKQMAJ001-E2(3/PTY)
SW404	40T55656W06	SW,TACT SKQMAJ001-E2(4/M.I.X.)
SW405	40T55656W06	SW,TACT SKQMAJ001-E2(EJECT)
SW406	40T55656W06	SW,TACT SKQMAJ001-E2(BWD/DN)
SW407	40T55656W06	SW,TACT SKQMAJ001-E2(T.INFO)
SW408	40T55656W06	SW,TACT SKQMAJ001-E2(FWD/UP)
SW409	40T55656W06	SW,TACT SKQMAJ001-E2(1/AF)
SW410	40T55656W06	SW,TACT SKQMAJ001-E2(5/REPEAT)
SW411	40T55656W06	SW,TACT SKQMAJ001-E2(SOURCE/POWER)
SW412	40T55656W06	SW,TACT SKQMAJ001-E2(PLAY/PAUSE/ TUNE/A.ME)
SW413	40T55656W06	SW,TACT SKQMAJ001-E2(TREBLE C.)
SW414	40T55656W06	SW,TACT SKQMAJ001-E2(2/NEWS)
SW415	40T55656W06	SW,TACT SKQMAJ001-E2(6/SCAN)
SW416	40T55656W06	SW,TACT SKQMAJ001-E2(BAND)
SW417	40T55656W06	SW,TACT SKQMAJ001-E2(BASS C.)
Lamps		
PL401	65T35324Y05	LAMP,GRN 6-80 -E5
PL402	65T35324Y05	LAMP,GRN 6-80 -E5
PL403	65T35324Y06	LAMP,BLU 6-80 -E5
PL404	65T35324Y05	LAMP,GRN 6-80 -E5
Capacitors		
C401	08S45676W89	CAP,CER 473K-B1E -CP
C409	08S45676W89	CAP,CER 473K-B1E -CP
C410	08S45676W89	CAP,CER 473K-B1E -CP
C411	08S45677W58	CAP,CER 821J-CH1H-CP
C412	08T81833F08	CAP,CER 475K-B1A -CP
Resistors		
R401	06S64995F77	RES,RK 103J 1/8 -CP
R402	06S64995F77	RES,RK 103J 1/8 -CP
R403	06S64995F77	RES,RK 103J 1/8 -CP
R404	06S64995F77	RES,RK 103J 1/8 -CP
R405	06S64995F53	RES,RK 102J 1/8 -CP
R406	06S70072F23	RES,CP .56R-J-1/4-CP
R407	06S70072F31	RES,CP .121-J-1/4-CP
R408	06S70072F23	RES,CP .56R-J-1/4-CP
R409	06S70072F31	RES,CP .121-J-1/4-CP

Symbol No.	Part No.	Description
R412	06S70072F37	RES, CP .221-J-1/4-CP
R413	06S70072F29	RES, CP .101-J-1/4-CP
R414	06S70072F37	RES, CP .221-J-1/4-CP
R415	06S70072F29	RES, CP .101-J-1/4-CP
R416	06S70072F37	RES, CP .221-J-1/4-CP
R417	06S70072F37	RES, CP .221-J-1/4-CP
R418	06S70072F29	RES, CP .101-J-1/4-CP
R419	06S70072F41	RES, CP .331-J-1/4-CP
R420	06S70072F29	RES, CP .101-J-1/4-CP
R421	06S70072F45	RES, CP .471-J-1/4-CP
R422	06S70072F15	RES, CP .27R-J-1/4-CP
R423	06S70072F07	RES, CP .12R-J-1/4-CP
R424	06S45674W57	RES, RK 102J 1/10 -CP
R425	06S45674W57	RES, RK 102J 1/10 -CP
R426	06S45674W57	RES, RK 102J 1/10 -CP
R427	06S45674W57	RES, RK 102J 1/10 -CP
R428	06S45674W57	RES, RK 102J 1/10 -CP
R429	06S45675W06	RES, RK 104J 1/10 -CP
R430	06S45674W73	RES, RK 472J 1/10 -CP
R431	06S45674W97	RES, RK 473J 1/10 -CP
R432	06S45674W57	RES, RK 102J 1/10 -CP
R433	06S45674W57	RES, RK 102J 1/10 -CP
R434	06S45674W57	RES, RK 102J 1/10 -CP
R435	06S45674W57	RES, RK 102J 1/10 -CP
R436	06S45674W57	RES, RK 102J 1/10 -CP
R437	06S45674W57	RES, RK 102J 1/10 -CP
R438	06S45674W57	RES, RK 102J 1/10 -CP
R439	06S45674W57	RES, RK 102J 1/10 -CP
R440	06S45674W57	RES, RK 102J 1/10 -CP
R441	06S45674W65	RES, RK 222J 1/10 -CP
R442	06S70072F15	RES, CP .27R-J-1/4-CP
R443	06S70072F57	RES, CP .152-J-1/4-CP
R445	06S45674W33	RES, RK 101J 1/10 -CP
R446	06S64995F53	RES, RK 102J 1/8 -CP
R448	06S70072F45	RES, CP .471-J-1/4-CP
R449	06S70072F29	RES, CP .101-J-1/4-CP
R450	06S70072F15	RES, CP .27R-J-1/4-CP
R452	06S70072F15	RES, CP .27R-J-1/4-CP
R453	06S70072F15	RES, CP .27R-J-1/4-CP
R454	06S70072F15	RES, CP .27R-J-1/4-CP
R455	06S70072F15	RES, CP .27R-J-1/4-CP
R456	06S70072F15	RES, CP .27R-J-1/4-CP

Symbol No.	Part No.	Description
Front P.W.Board <CDM-7872RB/CDM-7871R /CDM-7871RM/CDE-7860R Model Only>		
IC's		
	IC401	51T85152W01 LC75883 -QT
●	IC402	51T35614Y01 SBX3050-02 -NE5
△	IC402	51T35614Y01 SBX3050-02 -NE5
▲	IC402	51T35614Y01 SBX3050-02 -NE5
Transistors		
●	Q401	48T63788F04 TR , CP. 2SD1328-T -TX
●	Q402	48T62967F02 TR, DTC114EKA-T146-CP
△	Q402	48T62967F02 TR, DTC114EKA-T146-CP
▲	Q402	48T62967F02 TR, DTC114EKA-T146-CP
Diodes		
	D401	48T81063F01 DIO, CP. MA159 / TX-CP
	D402	48T81063F01 DIO, CP. MA159 / TX-CP
	D403	48T85357W01 DIO, 1PS226 -CP
	D404	48T85357W01 DIO, 1PS226 -CP
	D405	48T85357W01 DIO, 1PS226 -CP
	D406	48T85357W01 DIO, 1PS226 -CP
	D407	48T85357W01 DIO, 1PS226 -CP
●	D408	48T85357W01 DIO, 1PS226 -CP
△	D408	48T85357W01 DIO, 1PS226 -CP
▲	D408	48T85357W01 DIO, 1PS226 -CP
●	ZD401	48T15541Y23 DIO, ZEN MAZS180 -CP
●	ZD402	48T15541Y23 DIO, ZEN MAZS180 -CP
	ZD403	48T62934F26 DIO, ZEN. RD6.2MB3 -CP
LED's		
●	LD401	48T45280Y01 LED, WHT NSCWS405T-E2
●	LD402	48T45280Y01 LED, WHT NSCWS405T-E2
●	LD403	48T45280Y01 LED, WHT NSCWS405T-E2
●	LD404	48T45280Y01 LED, WHT NSCWS405T-E2
●	LD405	48T25534Y01 LED, GRN BG1111C -CP
△	LD405	48T25534Y01 LED, GRN BG1111C -CP
▲	LD405	48T25534Y03 LED, AMB AA1111C -CP
□	LD405	48T25534Y01 LED, GRN BG1111C -CP
●	LD406	48T25534Y01 LED, GRN BG1111C -CP
△	LD406	48T25534Y01 LED, GRN BG1111C -CP
▲	LD406	48T25534Y03 LED, AMB AA1111C -CP
□	LD406	48T25534Y01 LED, GRN BG1111C -CP
●	LD407	48T25534Y01 LED, GRN BG1111C -CP
△	LD407	48T25534Y01 LED, GRN BG1111C -CP
▲	LD407	48T25534Y03 LED, AMB AA1111C -CP

NOTE : ● : For CDM-7872RB Model Only, △ : For CDM-7871R Model Only, ▲ : For CDM-7871RM Model Only,
□ : For CDE-7860R Model Only, Others : Common.

CDM-7874RB/CDM-7872RB/CDM-7871R /CDM-7871RM/CDE-7860R

Symbol No.	Part No.	Description
□ LD407	48T25534Y01	LED, GRN BG1111C -CP
● LD408	48T25534Y01	LED, GRN BG1111C -CP
△ LD408	48T25534Y01	LED, GRN BG1111C -CP
▲ LD408	48T25534Y03	LED, AMB AA1111C -CP
□ LD408	48T25534Y01	LED, GRN BG1111C -CP
● LD409	48T25534Y01	LED, GRN BG1111C -CP
△ LD409	48T25534Y01	LED, GRN BG1111C -CP
▲ LD409	48T25534Y03	LED, AMB AA1111C -CP
□ LD409	48T25534Y01	LED, GRN BG1111C -CP
● LD410	48T25534Y01	LED, GRN BG1111C -CP
△ LD410	48T25534Y01	LED, GRN BG1111C -CP
▲ LD410	48T25534Y03	LED, AMB AA1111C -CP
□ LD410	48T25534Y01	LED, GRN BG1111C -CP
LD411	48T25534Y10	LED, YEL FY1111C -CP
LD412	48T25534Y10	LED, YEL FY1111C -CP
● LD413	48T25534Y01	LED, GRN BG1111C -CP
△ LD413	48T25534Y01	LED, GRN BG1111C -CP
▲ LD413	48T25534Y03	LED, AMB AA1111C -CP
□ LD413	48T25534Y01	LED, GRN BG1111C -CP
● LD414	48T25534Y01	LED, GRN BG1111C -CP
△ LD414	48T25534Y01	LED, GRN BG1111C -CP
▲ LD414	48T25534Y03	LED, AMB AA1111C -CP
□ LD414	48T25534Y01	LED, GRN BG1111C -CP
● LD415	48T25534Y09	LED, BLU DB1111C10-CP
LD416	48T25534Y02	LED, RED BR1111C -CP
● LD417	48T25534Y09	LED, BLU DB1111C10-CP
● LD418	48T25534Y09	LED, BLU DB1111C10-CP
● LD419	48T25534Y09	LED, BLU DB1111C10-CP

Switches

SW401	40T55656W06	SW, TACT SKQMAJ001-E2 (MUTE)
SW402	40T55656W06	SW, TACT SKQMAJ001-E2 (F/SETUP)
SW403	40T55656W06	SW, TACT SKQMAJ001-E2 (3/PTY)
SW404	40T55656W06	SW, TACT SKQMAJ001-E2 (4/M. I. X.)
SW405	40T55656W06	SW, TACT SKQMAJ001-E2 (EJECT)
SW406	40T55656W06	SW, TACT SKQMAJ001-E2 (BWD/DN)
SW407	40T55656W06	SW, TACT SKQMAJ001-E2 (T. INFO)
SW408	40T55656W06	SW, TACT SKQMAJ001-E2 (FWD/UP)
SW409	40T55656W06	SW, TACT SKQMAJ001-E2 (1/AF)
SW410	40T55656W06	SW, TACT SKQMAJ001-E2 (5/REPEAT)
SW411	40T55656W06	SW, TACT SKQMAJ001-E2 (SOURCE/POWER)
SW412	40T55656W06	SW, TACT SKQMAJ001-E2 (PLAY/PAUSE/ TUNE/A. ME)
SW413	40T55656W06	SW, TACT SKQMAJ001-E2 (TREBLE C.)
SW414	40T55656W06	SW, TACT SKQMAJ001-E2 (2/NEWS)
SW415	40T55656W06	SW, TACT SKQMAJ001-E2 (6/SCAN)
SW416	40T55656W06	SW, TACT SKQMAJ001-E2 (BAND)
SW417	40T55656W06	SW, TACT SKQMAJ001-E2 (BASS C.)
SW418	40T55656W06	SW, TACT SKQMAJ001-E2 (MODE/LOUD)
SW419	40T55656W06	SW, TACT SKQMAJ001-E2 (UP)
SW420	40T55656W06	SW, TACT SKQMAJ001-E2 (DOWN)

Lamps

● PL401	65T35324Y05	LAMP, GRN 6-80 -E5
△ PL401	65T35324Y02	LAMP, GRN 6-80 -E5
▲ PL401	65T35324Y03	LAMP, AMB 6-80 -E5
□ PL401	65T35324Y02	LAMP, GRN 6-80 -E5
● PL402	65T35324Y05	LAMP, GRN 6-80 -E5
△ PL402	65T35324Y02	LAMP, GRN 6-80 -E5
▲ PL402	65T35324Y03	LAMP, AMB 6-80 -E5
□ PL402	65T35324Y02	LAMP, GRN 6-80 -E5
● PL403	65T35324Y06	LAMP, BLU 6-80 -E5
△ PL403	65T35324Y02	LAMP, GRN 6-80 -E5
▲ PL403	65T35324Y03	LAMP, AMB 6-80 -E5
□ PL403	65T35324Y02	LAMP, GRN 6-80 -E5
● PL404	65T35324Y05	LAMP, GRN 6-80 -E5
△ PL404	65T35324Y02	LAMP, GRN 6-80 -E5
▲ PL404	65T35324Y03	LAMP, AMB 6-80 -E5
□ PL404	65T35324Y02	LAMP, GRN 6-80 -E5
△ PL405	65T45309Y03	LAMP, CLRGRN 9-100-E5
▲ PL405	65T45309Y02	LAMP, AMB 9-100 -E5
□ PL405	65T45309Y01	LAMP, GRN 9-100 -E5
△ PL406	65T45309Y03	LAMP, CLRGRN 9-100-E5
▲ PL406	65T45309Y02	LAMP, AMB 9-100 -E5
□ PL406	65T45309Y01	LAMP, GRN 9-100 -E5

Capacitors

C401	08S45676W89	CAP, CER 473K-B1E -CP
C409	08S45676W89	CAP, CER 473K-B1E -CP
C410	08S45676W89	CAP, CER 473K-B1E -CP
C411	08S45677W58	CAP, CER 821J-CH1H-CP
● C412	08T81833F08	CAP, CER 475K-B1A -CP
△ C412	08T81833F08	CAP, CER 475K-B1A -CP
▲ C412	08T81833F08	CAP, CER 475K-B1A -CP

Resistors

R401	06S64995F77	RES, RK 103J 1/8 -CP
R402	06S64995F77	RES, RK 103J 1/8 -CP
R403	06S64995F77	RES, RK 103J 1/8 -CP
R404	06S64995F77	RES, RK 103J 1/8 -CP
R405	06S64995F53	RES, RK 102J 1/8 -CP
● R406	06S70072F23	RES, CP .56R-J-1/4-CP
● R407	06S70072F31	RES, CP .121-J-1/4-CP
● R408	06S70072F23	RES, CP .56R-J-1/4-CP

NOTE : ● : For CDM-7872RB Model Only, △ : For CDM-7871R Model Only, ▲ : For CDM-7871RM Model Only, □ : For CDE-7860R Model Only, Others : Common.

Symbol No.	Part No.	Description
● R409	06S70072F31	RES, CP .121-J-1/4-CP
△ R410	06S70072F09	RES, CP .15R-J-1/4-CP
▲ R410	06S70072F11	RES, CP .18R-J-1/4-CP
□ R410	06S70072F09	RES, CP .15R-J-1/4-CP
△ R411	06S70072F09	RES, CP .15R-J-1/4-CP
▲ R411	06S70072F11	RES, CP .18R-J-1/4-CP
□ R411	06S70072F09	RES, CP .15R-J-1/4-CP
R412	06S70072F37	RES, CP .221-J-1/4-CP
● R413	06S70072F29	RES, CP .101-J-1/4-CP
△ R413	06S70072F29	RES, CP .101-J-1/4-CP
▲ R413	06S70072F33	RES, CP .151-J-1/4-CP
□ R413	06S70072F29	RES, CP .101-J-1/4-CP
R414	06S70072F37	RES, CP .221-J-1/4-CP
● R415	06S70072F29	RES, CP .101-J-1/4-CP
△ R415	06S70072F29	RES, CP .101-J-1/4-CP
▲ R415	06S70072F33	RES, CP .151-J-1/4-CP
□ R415	06S70072F29	RES, CP .101-J-1/4-CP
R416	06S70072F37	RES, CP .221-J-1/4-CP
● R417	06S70072F37	RES, CP .221-J-1/4-CP
△ R417	06S70072F37	RES, CP .221-J-1/4-CP
▲ R417	06S70072F41	RES, CP .331-J-1/4-CP
□ R417	06S70072F37	RES, CP .221-J-1/4-CP
● R418	06S70072F29	RES, CP .101-J-1/4-CP
△ R418	06S70072F29	RES, CP .101-J-1/4-CP
▲ R418	06S70072F37	RES, CP .221-J-1/4-CP
□ R418	06S70072F29	RES, CP .101-J-1/4-CP
R419	06S70072F41	RES, CP .331-J-1/4-CP
● R420	06S70072F29	RES, CP .101-J-1/4-CP
● R421	06S70072F45	RES, CP .471-J-1/4-CP
● R422	06S70072F15	RES, CP .27R-J-1/4-CP
△ R422	06S70072F15	RES, CP .27R-J-1/4-CP
▲ R422	06S70072F17	RES, CP .33R-J-1/4-CP
□ R422	06S70072F15	RES, CP .27R-J-1/4-CP
● R423	06S70072F07	RES, CP .12R-J-1/4-CP
△ R423	06S70072F07	RES, CP .12R-J-1/4-CP
▲ R423	06S70072F20	RES, CP .43R-J-1/4-CP
□ R423	06S70072F07	RES, CP .12R-J-1/4-CP
R424	06S45674W57	RES, RK 102J 1/10 -CP
R425	06S45674W57	RES, RK 102J 1/10 -CP
R426	06S45674W57	RES, RK 102J 1/10 -CP
R427	06S45674W57	RES, RK 102J 1/10 -CP
R428	06S45674W57	RES, RK 102J 1/10 -CP
R429	06S45675W06	RES, RK 104J 1/10 -CP
R430	06S45674W73	RES, RK 472J 1/10 -CP
R431	06S45674W97	RES, RK 473J 1/10 -CP
R432	06S45674W57	RES, RK 102J 1/10 -CP
R433	06S45674W57	RES, RK 102J 1/10 -CP
R434	06S45674W57	RES, RK 102J 1/10 -CP
R435	06S45674W57	RES, RK 102J 1/10 -CP

Symbol No.	Part No.	Description
R436	06S45674W57	RES, RK 102J 1/10 -CP
R437	06S45674W57	RES, RK 102J 1/10 -CP
R438	06S45674W57	RES, RK 102J 1/10 -CP
R439	06S45674W57	RES, RK 102J 1/10 -CP
R440	06S45674W57	RES, RK 102J 1/10 -CP
● R441	06S45674W65	RES, RK 222J 1/10 -CP
● R442	06S70072F15	RES, CP .27R-J-1/4-CP
△ R442	06S35095Y08	RES, RK JUMPER 1/4-CP
▲ R442	06S35095Y08	RES, RK JUMPER 1/4-CP
□ R442	06S35095Y08	RES, RK JUMPER 1/4-CP
R443	06S70072F57	RES, CP .152-J-1/4-CP
● R445	06S45674W33	RES, RK 101J 1/10 -CP
△ R445	06S45674W33	RES, RK 101J 1/10 -CP
▲ R445	06S45674W33	RES, RK 101J 1/10 -CP
● R446	06S64995F53	RES, RK 102J 1/8 -CP
△ R446	06S64995F53	RES, RK 102J 1/8 -CP
▲ R446	06S64995F53	RES, RK 102J 1/8 -CP
● R448	06S70072F45	RES, CP .471-J-1/4-CP
● R449	06S70072F29	RES, CP .101-J-1/4-CP
● R450	06S70072F15	RES, CP .27R-J-1/4-CP
△ R450	06S70072F15	RES, CP .27R-J-1/4-CP
▲ R450	06S70072F17	RES, CP .33R-J-1/4-CP
□ R450	06S70072F15	RES, CP .27R-J-1/4-CP
● R451	06S70072F15	RES, CP .27R-J-1/4-CP
△ R451	06S70072F15	RES, CP .27R-J-1/4-CP
▲ R451	06S70072F17	RES, CP .33R-J-1/4-CP
□ R451	06S70072F15	RES, CP .27R-J-1/4-CP
● R452	06S70072F15	RES, CP .27R-J-1/4-CP
△ R452	06S70072F15	RES, CP .27R-J-1/4-CP
▲ R452	06S70072F17	RES, CP .33R-J-1/4-CP
□ R452	06S70072F15	RES, CP .27R-J-1/4-CP
● R453	06S70072F15	RES, CP .27R-J-1/4-CP
△ R453	06S70072F15	RES, CP .27R-J-1/4-CP
▲ R453	06S70072F17	RES, CP .33R-J-1/4-CP
□ R453	06S70072F15	RES, CP .27R-J-1/4-CP
● R454	06S70072F15	RES, CP .27R-J-1/4-CP
△ R454	06S70072F15	RES, CP .27R-J-1/4-CP
▲ R454	06S70072F17	RES, CP .33R-J-1/4-CP
□ R454	06S70072F15	RES, CP .27R-J-1/4-CP
□ R455	06S35095Y08	RES, RK JUMPER 1/4-CP
● R456	06S70072F15	RES, CP .27R-J-1/4-CP
△ R456	06S35095Y08	RES, RK JUMPER 1/4-CP
▲ R456	06S35095Y08	RES, RK JUMPER 1/4-CP
□ R456	06S35095Y08	RES, RK JUMPER 1/4-CP

NOTE : ● : For CDM-7872RB Model Only, △ : For CDM-7871R Model Only, ▲ : For CDM-7871RM Model Only,
□ : For CDE-7860R Model Only, Others : Common.

CDM-7874RB/CDM-7872RB/CDM-7871R /CDM-7871RM/CDE-7860R

Symbol No.	Part No.	Description
PREOUT & REMO-CON P.W.Board <CDM-7874RB Model Only>		
IC		
IC202	51T45330Y01	NJM2160AM-TE2 -SE6
Transistors		
Q231	48T62967F33	TR, DTC343TK-T146 -CP
Q232	48T62967F33	TR, DTC343TK-T146 -CP
Q691	48T62967F02	TR, DTC114EKA-T146-CP
Q692	48T62967F02	TR, DTC114EKA-T146-CP
Q693	48T63420F01	TR, 2SA1037AK-146 -CP
Q694	48T62967F02	TR, DTC114EKA-T146-CP
Diode		
D691	48T63462F01	DIO, CP. DAN202K -96
Capacitors		
C202	08S45677W60	CAP, CER 102J-CH1H-CP
C203	08S45677W60	CAP, CER 102J-CH1H-CP
C220	08S45677W60	CAP, CER 102J-CH1H-CP
C221	08S45676W63	CAP, CER 152K-B1H -CP
C691	08S45677W36	CAP, CER. 101J-CH1H-CP
C692	08S45676W73	CAP, CER. 103K-B1H -CP
C693	08S65128F88	CAP, CER 104K-B1H -CP
C694	08S45676W65	CAP, CER. 222K-B1H -CP
E220	23S65134W31	CAP, ELY 10R-1C(4)-E2
E221	23S65134W31	CAP, ELY 10R-1C(4)-E2
E222	23S65134W32	CAP, ELY 22R-1C(5)-E3
E223	23S65134W32	CAP, ELY 22R-1C(5)-E3
E224	23S65134W32	CAP, ELY 22R-1C(5)-E3
E225	23S65134W23	CAP, ELY 101-1A(6)-E6
E226	23S65134W23	CAP, ELY 101-1A(6)-E6
E231	23S65134W51	CAP, ELY 2R2-1V(3)-E2
E232	23S65134W51	CAP, ELY 2R2-1V(3)-E2
Resistors		
R220	06S64995F86	RES, RK 243J 1/8 -CP
R221	06S64995F86	RES, RK 243J 1/8 -CP
R222	06S64995F90	RES, RK 363J 1/8 -CP
R223	06S64995F90	RES, RK 363J 1/8 -CP
R231	06S45674W40	RES, RK 201J 1/10 -CP
R232	06S45674W40	RES, RK 201J 1/10 -CP
R233	06S45674W33	RES, RK 101J 1/10 -CP
R234	06S45674W33	RES, RK 101J 1/10 -CP
R235	06S45674W96	RES, RK 433J 1/10 -CP
R236	06S45674W96	RES, RK 433J 1/10 -CP
R691	06S45674W57	RES, RK 102J 1/10 -CP
R692	06S45674W89	RES, RK 223J 1/10 -CP
R693	06S45674W89	RES, RK 223J 1/10 -CP
R694	06S45674W81	RES, RK 103J 1/10 -CP
R695	06S45674W65	RES, RK 222J 1/10 -CP
R696	06S45674W69	RES, RK 332J 1/10 -CP
R697	06S70072F29	RES, CP .101-J-1/4-CP
Connectors		
CB201	09T25436Y03	WTB, 53253-0310 -DB
CB202	09T25436Y06	WTB, 53253-0610 -DB
CB691	09T25436Y04	WTB, 53253-0410 -DB
REMO-CON P.W.Board <CDM-7872RB/CDM-7871R/CDM-7871RM Model Only>		
Transistors		
Q671	48T62967F02	TR, DTC114EKA-T146-CP
Q672	48T62967F02	TR, DTC114EKA-T146-CP
Q673	48T63420F01	TR, 2SA1037AK-146 -CP
Q674	48T62967F02	TR, DTC114EKA-T146-CP
Diodes		
D671	48T63462F01	DIO, CP. DAN202K -96
Capacitors		
C671	08S45677W36	CAP, CER. 101J-CH1H-CP
C672	08S45676W73	CAP, CER. 103K-B1H -CP
C673	08S65128F88	CAP, CER 104K-B1H -CP
C674	08S45676W65	CAP, CER. 222K-B1H -CP
Resistors		
R671	06S45674W57	RES, RK 102J 1/10 -CP
R672	06S45674W89	RES, RK 223J 1/10 -CP
R673	06S45674W89	RES, RK 223J 1/10 -CP

Symbol No.	Part No.	Description
R674	06S45674W81	RES, RK 103J 1/10 -CP
R675	06S45674W65	RES, RK 222J 1/10 -CP
R676	06S45674W69	RES, RK 332J 1/10 -CP
R677	06S70072F29	RES, CP .101-J-1/4-CP

DP-S Main P.W.Board

IC's

IC201	51T55329Y02	IC, D789026GB-A82 -QT
IC301	51T55156Y01	UPD63711A -QT
IC302	51T55295Y01	AN80M50RSPE1 -NE5
IC401	51T55093Y01	BA5984FP-E2 -SEA

Transistors

Q301	48T55462Y01	TR, 2SB1132-QR-100-E2
Q401	48T94606F03	TR, DTC124EUA-T106-CP

Diode

D401	48T81063F01	DIO, CP. MA159 / TX-CP

Crystals

CL201	91T45281Y03	OSC, CER CSTCR4M19-E1
CL301	91T55147Y01	OSC, CER CSACV16M9-E1

Capacitors

C238	08S45676W85	CAP, CER 104K-B1C -CP
C240	08S45676W85	CAP, CER 104K-B1C -CP
C241	08S45676W73	CAP, CER. 103K-B1H -CP
C246	08S45676W85	CAP, CER 104K-B1C -CP
C302	08S45676W85	CAP, CER 104K-B1C -CP
C304	08S45676W80	CAP, CER 223K-B1E -CP
C305	08S45676W85	CAP, CER 104K-B1C -CP
C306	08S45676W85	CAP, CER 104K-B1C -CP
C308	08S45676W85	CAP, CER 104K-B1C -CP
C310	08S45676W85	CAP, CER 104K-B1C -CP
C311	08S45676W73	CAP, CER. 103K-B1H -CP
C314	08S45676W65	CAP, CER. 222K-B1H -CP
C315	08S45676W65	CAP, CER. 222K-B1H -CP
C318	08S45676W73	CAP, CER. 103K-B1H -CP
C319	08S45676W85	CAP, CER 104K-B1C -CP
C320	08S45676W85	CAP, CER 104K-B1C -CP
C321	08S45676W85	CAP, CER 104K-B1C -CP
C322	08S45676W87	CAP, CER 333K-B1E -CP
C323	08S45676W85	CAP, CER 104K-B1C -CP
C324	08S45676W85	CAP, CER 104K-B1C -CP
C325	08S45676W68	CAP, CER. 392K-B1H -CP
C326	08S45676W93	CAP, CER 224K-B1A -CP
C327	08S45677W20	CAP, CER. 22RJ-CH1H-CP
C328	08S45677W03	CAP, CER 1R5C-CH1H-CP
C330	08S45677W30	CAP, CER. 56RJ-CH1H-CP
C331	08S45677W26	CAP, CER. 39RJ-CH1H-CP
C332	08S45676W85	CAP, CER 104K-B1C -CP
C334	08S45676W85	CAP, CER 104K-B1C -CP
C336	08S45676W85	CAP, CER 104K-B1C -CP
C341	08S45677W20	CAP, CER. 22RJ-CH1H-CP
C345	08S45677W60	CAP, CER 102J-CH1H-CP
C346	08S45677W60	CAP, CER 102J-CH1H-CP
C409	08S45676W85	CAP, CER 104K-B1C -CP
C449	08S45677W40	CAP, CER. 151J-CH1H-CP
C450	08S45677W54	CAP, CER 561J-CH1H-CP
E239	23T45152Y02	CAP, RA 47R-05 -E5
E301	23T45152Y02	CAP, RA 47R-05 -E5
E303	23S55311W35	CAP, TAN 10R-1C-B -CP
E310	23S55311W35	CAP, TAN 10R-1C-B -CP
E316	23T45152Y02	CAP, RA 47R-05 -E5
E317	23T45152Y03	CAP, RA 22R-0J -E5
E329	23S55311W28	CAP, TAN 22R-1A-B -CP
E331	23S55311W31	CAP, TAN. 2R2-1C-A -CP
E333	23T45152Y04	CAP, RA 10R-1C -E5
E337	23T45152Y02	CAP, RA 47R-05 -E5
E338	23S55311W35	CAP, TAN 10R-1C-B -CP
E407	23T45152Y04	CAP, RA 10R-1C -E5

Resistors

R201	06S45674W97	RES, RK 473J 1/10 -CP
R202	06S45674W97	RES, RK 473J 1/10 -CP
R203	06S45674W97	RES, RK 473J 1/10 -CP
R212	06S45674W33	RES, RK 101J 1/10 -CP
R226	06S45674W93	RES, RK 333J 1/10 -CP
R228	06S45674W81	RES, RK 103J 1/10 -CP
R229	06S45674W97	RES, RK 473J 1/10 -CP
R230	06S45674W33	RES, RK 101J 1/10 -CP
R246	06S45675W43	RES, RK JUMPER1/10-CP
R250	06S45674W97	RES, RK 473J 1/10 -CP
R251	06S45674W97	RES, RK 473J 1/10 -CP
R252	06S45674W97	RES, RK 473J 1/10 -CP
R253	06S45674W97	RES, RK 473J 1/10 -CP

CDM-7874RB/CDM-7872RB/CDM-7871R /CDM-7871RM/CDE-7860R

Symbol No.	Part No.	Description
R254	06S45674W97	RES, RK 473J 1/10 -CP
R255	06S45674W97	RES, RK 473J 1/10 -CP
R256	06S45674W97	RES, RK 473J 1/10 -CP
R257	06S45674W97	RES, RK 473J 1/10 -CP
R258	06S45674W97	RES, RK 473J 1/10 -CP
R259	06S45674W97	RES, RK 473J 1/10 -CP
R260	06S45674W97	RES, RK 473J 1/10 -CP
R261	06S45674W97	RES, RK 473J 1/10 -CP
R262	06S45674W97	RES, RK 473J 1/10 -CP
R263	06S45674W97	RES, RK 473J 1/10 -CP
R264	06S45674W97	RES, RK 473J 1/10 -CP
R265	06S45674W97	RES, RK 473J 1/10 -CP
R266	06S45674W97	RES, RK 473J 1/10 -CP
R270	06S45674W93	RES, RK 333J 1/10 -CP
R301	06S70072F05	RES, CP .10R-J-1/4-CP
R302	06S70072F05	RES, CP .10R-J-1/4-CP
R311	06S45675W43	RES, RK JUMPER1/10-CP
R316	06S45674W41	RES, RK 221J 1/10 -CP
R317	06S45674W41	RES, RK 221J 1/10 -CP
R323	06S45674W81	RES, RK 103J 1/10 -CP
R324	06S45674W95	RES, RK 393J 1/10 -CP
R325	06S45674W78	RES, RK 752J 1/10 -CP
R331	06S45675W43	RES, RK JUMPER1/10-CP
R332	06S45675W43	RES, RK JUMPER1/10-CP
R333	06S45675W43	RES, RK JUMPER1/10-CP
R334	06S45675W43	RES, RK JUMPER1/10-CP
R341	06S45675W43	RES, RK JUMPER1/10-CP
R343	06S45674W93	RES, RK 333J 1/10 -CP
R344	06S45674W93	RES, RK 333J 1/10 -CP
R345	06S45674W93	RES, RK 333J 1/10 -CP
R401	06S45675W06	RES, RK 104J 1/10 -CP
R402	06S45674W33	RES, RK 101J 1/10 -CP
R403	06S64995F87	RES, RK 273J 1/8 -CP
R404	06S45674W95	RES, RK 393J 1/10 -CP
R405	06S45674W85	RES, RK 153J 1/10 -CP
R406	06S45674W81	RES, RK 103J 1/10 -CP
R407	06S45674W81	RES, RK 103J 1/10 -CP
R408	06S45674W89	RES, RK 223J 1/10 -CP
R409	06S45674W81	RES, RK 103J 1/10 -CP
R410	06S45674W81	RES, RK 103J 1/10 -CP
R411	06S45674W89	RES, RK 223J 1/10 -CP
R434	06S45674W33	RES, RK 101J 1/10 -CP
R435	06S45674W33	RES, RK 101J 1/10 -CP
R436	06S45674W33	RES, RK 101J 1/10 -CP
R437	06S45674W33	RES, RK 101J 1/10 -CP
RA201	06S45591W07	RES, ARY MNR101J 4-CP
RA202	06S45591W07	RES, ARY MNR101J 4-CP

Symbol No.	Part No.	Description
Connectors		
CB101	09T45435W22	FFC, 52207-2290 -EQ
CB102	09T45435W15	FFC, 52207-1590 -ED
CB103	09T45435W07	FFC, 52207-0790 -E9
Miscelaneous		
ANT001	09T01876K01	ANT, RECEPTACLE
CB601	09T15299Y15	BTB, TMD-V15X-B1 -DB
CB801	09T35343Y16	WTB, IMSA9451B-16 -DB
CH401	09T15298Y15	BTB, TMD-V15P-A1 -B
○ DIN501	09T55493W02	DIN, SKT 8P CMS-R -DT
● DIN501	09T55493W02	DIN, SKT 8P CMS-R -DT
△ DIN501	09T55493W02	DIN, SKT 8P CMS-R -DT
▲ DIN501	09T55493W02	DIN, SKT 8P CMS-R -DT
○ ET201	01T35497Y13	ASSY, WIRE RCA 7874RN(SUB-W)
○ JK201	01T02234K01	ASSY, CONN NLT2068(FRONT/REAR)
● JK201	01T02234K01	ASSY, CONN NLT2068(FRONT/REAR)
△ JK201	01T02234K02	ASSY, CONN NLT2069(REAR)
▲ JK201	01T02234K02	ASSY, CONN NLT2069(REAR)
□ JK201	01T02234K02	ASSY, CONN NLT2069(REAR)
● JK671	09T95460W01	JAC, HSJ0857-01-1010+
△ JK671	09T95460W01	JAC, HSJ0857-01-1010+
▲ JK671	09T95460W01	JAC, HSJ0857-01-1010+
○ JK691	09T95460W01	JAC, HSJ0857-01-1010+
○ LCD401	65T55234Y02	LCD, WTD-20880H
● LCD401	65T55234Y02	LCD, WTD-20880H
△ LCD401	65T55234Y06	LCD, WTD-20880ABH
▲ LCD401	65T55234Y07	LCD, WTD-20880ACH
□ LCD401	65T02287K01	LCD, HLC7712-012300
○ SW418	40T55277Y02	ENC, EC11E15445 -B (ROTARY ENCODER/MODE·LOUD)
DP23S2A0		
HD101	81B50360Y01	PICKUP, EP21A67L
M101	01V56100Y14	ASSY, MOTOR WORM 2B0(3.5V-80mA)
M102	01V56100Y12	ASSY, MOTOR SLED 2B0(3.5V-80mA)
M103	01V56100Y11	ASSY, MTR SPINDOL 2B0(3V-90mA)
SW1	40T15494Y01	SW, DETCT SPVG23 -E6(12cm DISC DETECT(EJECT POSITION/RELOAD))
SW2	40T15494Y02	SW, DETCT SPVG13 -E6(8/12cm DISC DETECT(INSERT/PULL OUT))
SW3	40T15494Y07	SW, DETCT SPVG21 -E6(8cm DISC DETECT (EJECT POSITION/RELOAD))

NOTE : ○ : For CDM-7874RB Model Only, ● : For CDM-7872RB Model Only, △ : For CDM-7871R Model Only, ▲ : For CDM-7871RM Model Only, □ : For CDE-7860R Model Only, Others : Common.

Symbol No.	Part No.	Description
SW4	40T15494Y01	SW,DETCT SPVG23 -E6(DISC CHUCKING END DETECT)
SW105	40T71025F03	SW,DETCT SPPB120(LIMIT)

Symbol No.	Part No.	Description

CDM-7874RB/CDM-7872RB/CDM-7871R /CDM-7871RM/CDE-7860R

Cabinet Assembly Parts List

NOTE:Parts without part number are not supplied.

Symbol No.		Index	Part No.	Description
○	1		01V54800Y02	ASSY, NOSE UNIT 74RN
●	1		01V54700Y95	ASSY, NOSE UNIT 72RN
△	1		01V54700Y84	ASSY, NOSE UNIT 71RN
▲	1		01V54700Y91	ASSY, NOSE UNIT 71RM
□	1		01V54700Y77	ASSY, NOSE UNIT 60RN
	5		14B02209K01	INSULATOR, MAIN
	6		13C01847K01	FRONT, ESCU ASSY
	7		03S44205G29	SCR, T-TITE M2.6X6
○	8		33C01797K03	FACE, PLATE
●	8		33C01797K03	FACE, PLATE
△	8		33C01797K01	FACE, PLATE
▲	8		33C01797K01	FACE, PLATE
□	8		33C01797K01	FACE, PLATE
	9		03S38013W05	SCR, T-TITE M2.6X16
	10		07D00749K01	BKT, SIDE L
	11		07D00749K02	BKT, SIDE R
○	12		03S68555F16	SCR, WAVE M2.6X8
●	12		03S68555F16	SCR, WAVE M2.6X8
△	12		03S68555F16	SCR, WAVE M2.6X8
▲	12		03S68555F16	SCR, WAVE M2.6X8
	13		75T25010Y42	CUSHION, SLDP13-425L
○	14		02S40000G53	NUTS, HEXAGON
●	14		02S40000G53	NUTS, HEXAGON
△	14		02S40000G53	NUTS, HEXAGON
▲	14		02S40000G53	NUTS, HEXAGON
	15		75S40755Y85	CUS, RUB 3X5XT3
	17		77B50886Y01	MB4R002Z FM/AM UNIT(TU001)
	20		03S71677F56	SCR, B-TITE M1.7X12
○	21		13C02138K01	NOSE, PIECE ASSY
●	21		13C02136K02	NOSE, PIECE ASSY
△	21		13C02135K05	NOSE, PIECE ASSY
▲	21		13C02136K01	NOSE, PIECE ASSY
□	21		13C02135K04	NOSE, PIECE ASSY
○	22		13D01845K02	NOSE, BOTTOM
●	22		13D01845K02	NOSE, BOTTOM
△	22		13D01845K01	NOSE, BOTTOM
▲	22		13D01845K01	NOSE, BOTTOM
□	22		13D01845K01	NOSE, BOTTOM
○	23		36B50405Y02	KNOB, ROTALY ASSY
	24		15B01768K01	COVER, LCD
	25		26A41975Y01	REFLECTOR, SHEET
	26		75T85248W12	RUBBER, ELECTRIC
○	27		15D01770K01	CASE, LCD ASSY
●	27		15D01770K01	CASE, LCD ASSY
△	27		15D01772K01	CASE, LCD ASSY
▲	27		15D01772K01	CASE, LCD ASSY
□	27		15D01772K01	CASE, LCD ASSY
	28		81D50617Y01	DP23S2A0, CD MECH
	29		30T45473Y04	FFC, RMW8086-1A
□	30		26A41975Y02	REFLECTOR, SHEET(A)

NOTE : ○ : For CDM-7874RB Model Only, ● : For CDM-7872RB Model Only, △ : For CDM-7871R Model Only, ▲ : For CDM-7871RM Model Only, □ : For CDE-7860R Model Only, Others : Common.

Exploded View (Cabinet)

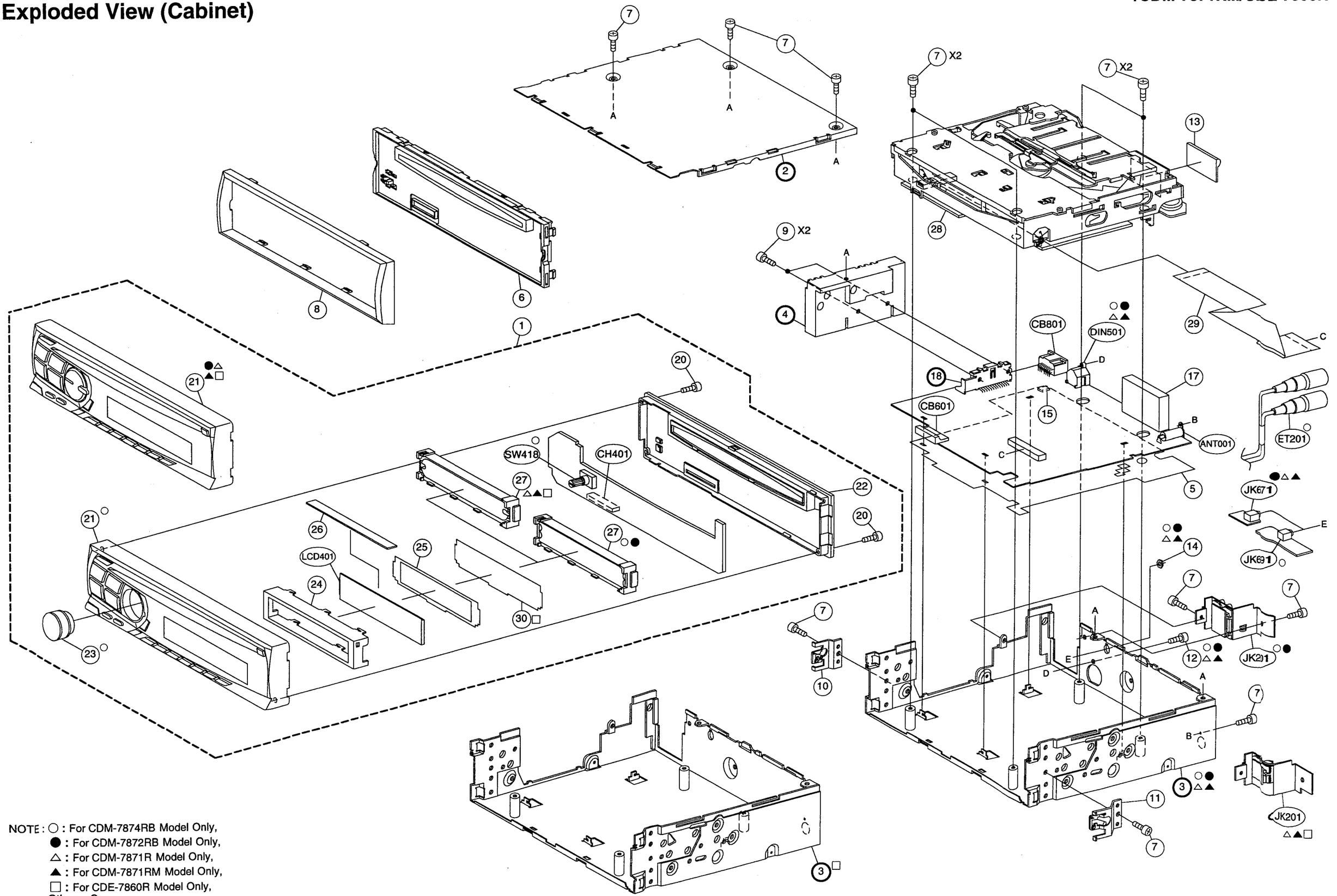

NOTE : ○ : For CDM-7874RB Model Only,
● : For CDM-7872RB Model Only,
△ : For CDM-7871R Model Only,
▲ : For CDM-7871RM Model Only,
□ : For CDE-7860R Model Only,
Others : Common.

Exploded View (CD Deck Mechanism)

(DP23S2AO)

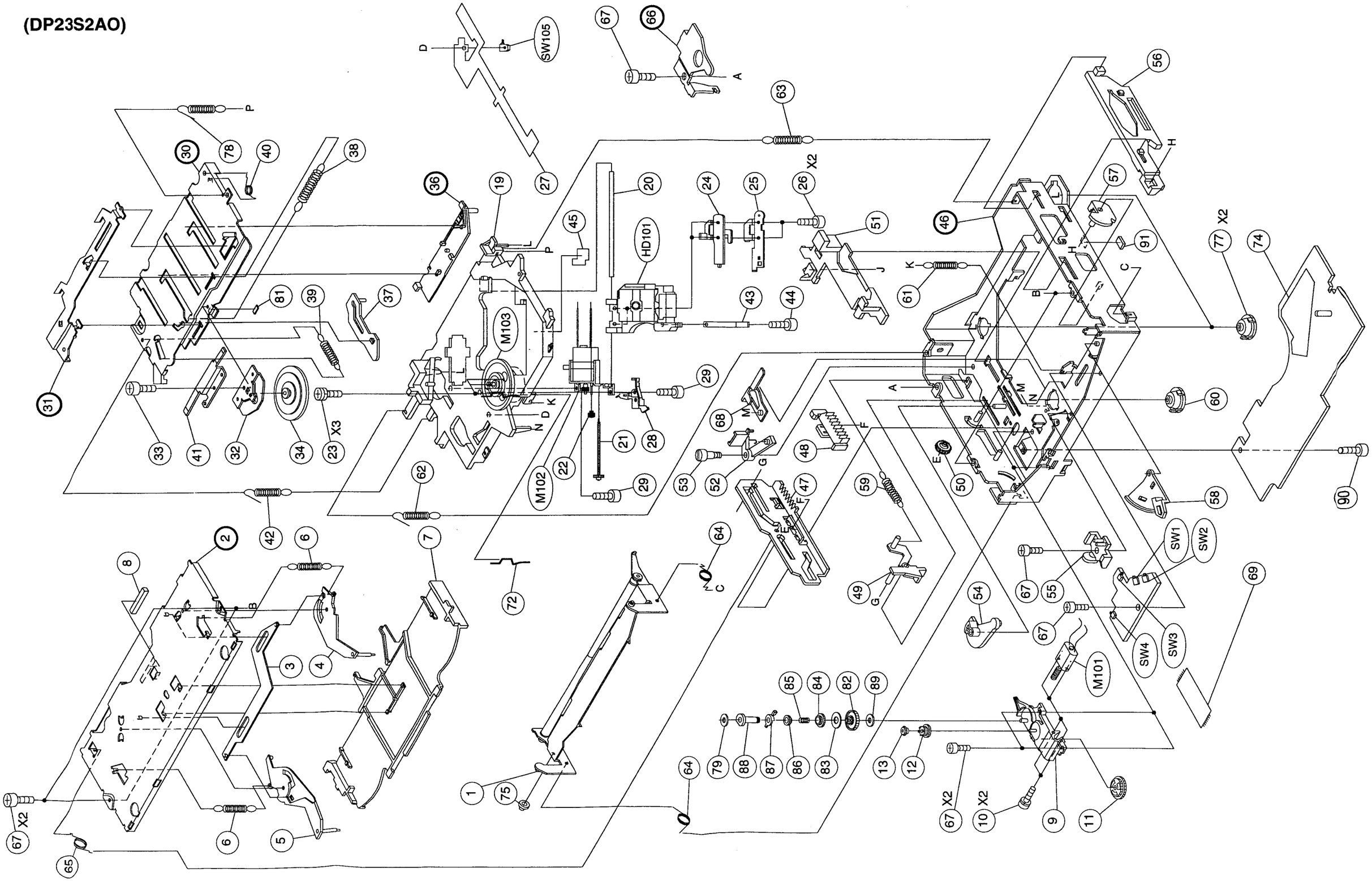

CD Deck Mechanism Assembly Parts List

NOTE:Parts without part number are not supplied.

Symbol No.	Index	Part No.	Description
1		01V43800Y84	ASSY, ARM GUIDE 280
3		45B11564Y02	LEVER, LINK-TOP
4		45B11595Y02	LEVER DISC(R)
5		45B11596Y02	LEVER, DISC(L)
6		41B11613Y16	SPRING, PULL
7		15D50248Y01	GUIDE, TOP-DPS2
8		75A21286Y04	CUSHION, CLAMPER DPS2
9		07C50608Y01	BKT, MOTOR LOAD-P
10		03S40014G07	SCR, MCH M2X4
11		44B11578Y02	GEAR, (A)
12		44B11579Y02	GEAR, (B)
13		44B11580Y02	GEAR, (C)
19		27D11602Y04	CHASSIS, PICKUP
20		47A11575Y01	SHAFT, PICK
21		01V28100Y59	ASSY, SHAFT. SCREW
22		44A70590W03	GEAR, MIDDLE
23		03S72235F96	SCR, MCH M1.7X3.5(SW)
24		07B30337Y02	BKT, SPRING NUT
25		41A11606Y10	SPRING, NUT
26		03S94385F18	SCR, NYLON M2X3.5
27		84T01803K01	PANEL, FPC CONT
28		41B11566Y10	SPRING SHAFT
29		03S70494F13	SCR, P-TITE M2X6 BLK
32		07A11565Y02	PLATE, CLAMP
33		03S94385F01	SCR, NYLOK M1.7X2.3
34		43A41812Y02	TABLE, CLAMPER2
37		45A11599Y02	LEVER, ACTUATOR
38		41B11613Y03	SPRING, PULL
39		41B11613Y05	SPRING, LEV-ACT
40		41A11609Y01	SPRING, LEVER
41		41B40574Y10	SPRING, PLATE-S
42		41B11613Y15	SPRING, PULL
43		41A11040Y10	SPRING, SLED-HOE
44		03S70494F52	SCR, P-TITE M1.4X4.5
45		43A21240Y01	SHEET, FPC PICK
47		45B40510Y02	SLIDER, LOAD
48		44B40527Y02	·RACK
49		45A11601Y02	LEVER, TRIGER
50		44B11581Y02	GEAR, (D)
51		45B11594Y02	SLIDER, LOCK(L)
52		45A11592Y02	ARM, LOCK(L2)
53		03A11574Y01	SCREW, LOCK
54		45B11591Y02	ARM, LOCK(L1)
55		07A50606Y01	BKT, MOTOR WIRE-P
56		45B11593Y02	SLIDER, LOCK(R)
57		45B11607Y02	ARM, LOCK(R)
58		45A11597Y02	LEVER, SW
59		41B11613Y04	SPRING, TRIGER
60		75C30466Y04	DAMPER, DPS2
61		41B11613Y06	SPRING, PULL
62		41B11613Y07	SPRING, PULL
63		41B11613Y08	SPRING, PULL
64		41A40518Y01	SPRING, ROL
65		41A31894Y01	SPRING, SLIDER
67		03A21791Y01	SCREW, M2X3.5 S-TITE
68		07B20905Y02	BKT, FPC CONT
69		30T15126W15	WIRE, PC JOINT 7P
72		41A21613Y02	SPRING, SPINDLE
74		14A30831Y01	INS, CVR
75		43A31443Y01	ROLLER, ARM DISC (C)
77		75C30466Y05	DAMPER, DPS2
78		41B11613Y14	SPLING, PULL
79		04B41345P52	WASH, 1.6X3.5X0.25
81		75A21286Y02	CUSHION, CLAMPER BACK
82		44B40523Y02	GEAR, BASE
83		04A40528Y01	WASHER, FELT
84		44A40524Y02	GEAR, CLUTCH
85		41A40529Y01	SPRING, CLUTCH
86		44A40525Y02	GEAR, PINION
87		15A40526Y02	HOLDER, CLUTCH
88		43A41446Y02	SLEEVE, CLUTCH
89		04B41345P25	WASH, L. 3.1X6X0.35
90		03S44205G99	SCR, T-TITE M2X3
91		75A21286Y05	CUSHION, PWB